TOYO

9001 14001 45001

Ball Screw Actuator - Slider Type

ETH2 / ECH2 Series

Height reduction.

TOYO AUTOMATION CO., LTD

[ETH2/ECH2 Features]

Ball Screw Actuators

ETH2

2nd Gen, compact design and lower price!

Grease Port Equipped

Improvement from 1st Gen.
Greasing from both side.

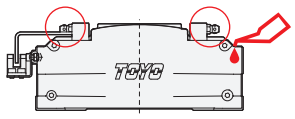

Different Motor Orientation

BC Inline | BL Left | BR Right | BM Bottom

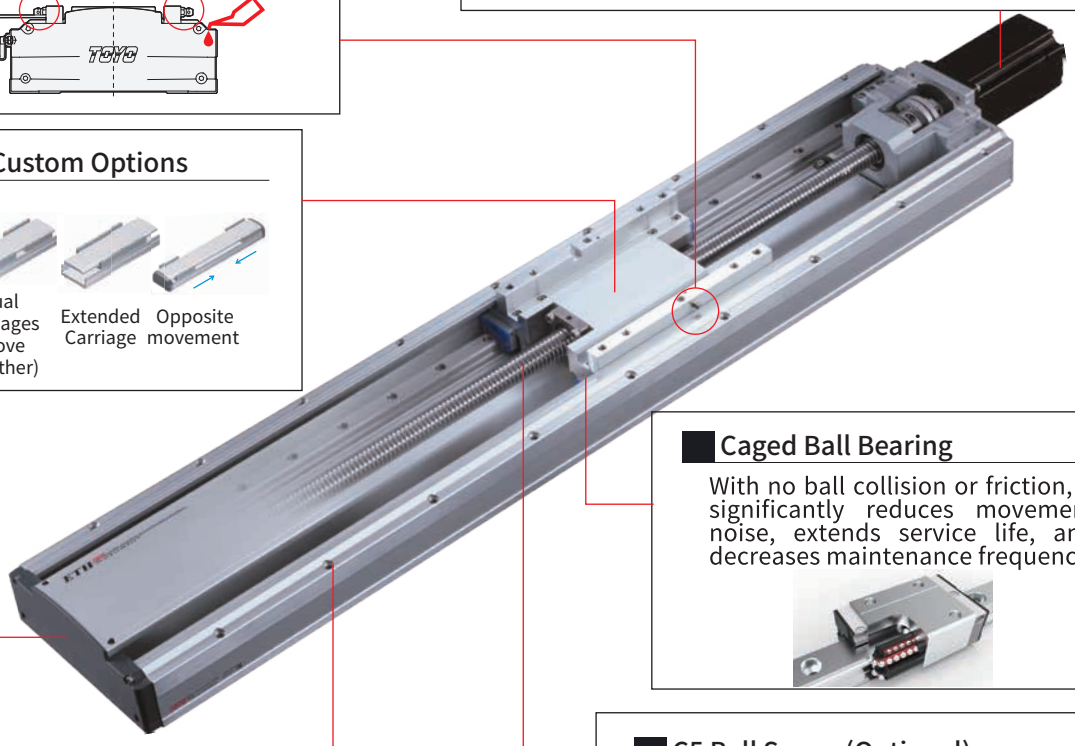

Diverse Custom Options

Dual Carriages (Move separately) | Dual Carriages (Move together) | Extended Carriage | Opposite movement

Caged Ball Bearing

With no ball collision or friction, it significantly reduces movement noise, extends service life, and decreases maintenance frequency.

Top-down, Bottom-up mount

Direct mount without removing the cover.

Bottom | Top

C5 Ball Screw (Optional)

Standard C7 Ball Screw	Optional C5 Ball Screw
Repeatability ±5μm	Repeatability ±3μm

Higher Ball Screw RPM

- Up to **3600~4000rpm**
  (Depends on the model)

Lower Center of Gravity

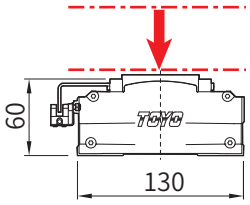

Low profile
Reduced weight and height. Makes overall design more compact whether use alone or in gantry configuration.

High Strength Structure

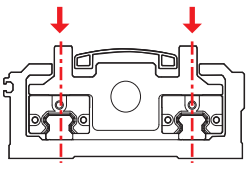

Mounting holes place right on top of the rail. Reduced vibration and increase stability while high speed application.

Reduced Height, Width and Weight

Unit:mm

2nd Gen ETH2 VS ETH 1st Gen

Weight drop by 50% | Width reduced by 5mm | Height drop by 18mm

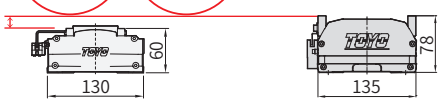

ETH2-14 ETH14

Weight drop by 40% | Width reduced by 18mm | Height drop by 33mm

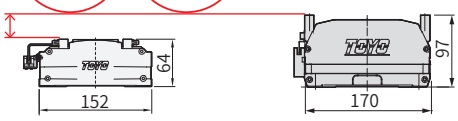

ETH2-17 ETH17

Half of the weight | Width reduced by 8mm | Height drop by 45mm

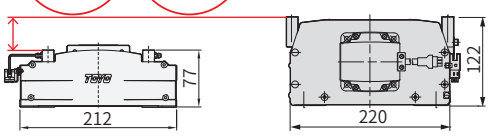

ETH2-22 ETH22

2nd Gen ECH2 VS ECH 1st Gen

Weight drop by 50% | Width reduced by 5mm | Height drop by 19mm

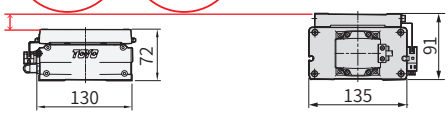

ECH2-14 ECH14

Weight drop by 40% | Width reduced by 18mm | Height drop by 34mm

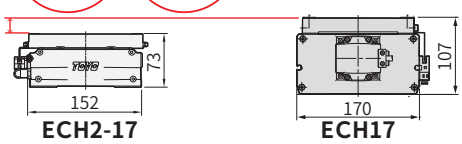

ECH2-17 ECH17

Half of the weight | Width reduced by 8mm | Height drop by 50mm

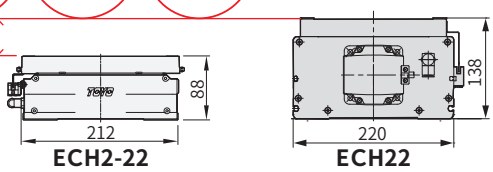

ECH2-22 ECH22

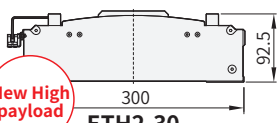

New High payload

ETH2-30

TOYO's latest second-generation product features low assembly and lightweight design, significantly improving upon the usability and durability issues of the first generation. As technology advances, this evolved second-generation product will help upgrade your equipment!

ECH2 Clean Room Series Feature (Semi-Conductor Production Ready)

Air Fitting

Meet ISO4(Class 10) with air fitting

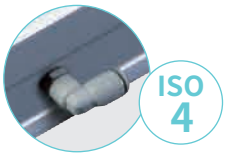

Suitable for different environment

Offering Original and black color option.
Open and enclose cover options.
Optional cold plated ball screw and linear guide. Produce less dust, reduced wear, lower noise level, anti acid and no reflection. Only 2% reflection rate.

Black color* Aluminum color

*Only 1st Gen

Open design Enclosed design

Cold plated ball screw and rail

ISO CLASS Clean Room Certification

All certification are coming from authorized institution examine base on ISO 14644-1.

Clean Room Assembly

TOYO is few linear motion manufacturer in the world (Taiwan only) that can assemble actuators in clean room. Making sure minimized the contamination.

Memo

Spec Index of Electric Actuator

ETH2 Ball Screw Actuator - Slider Type

Env.	Drive Type	Spec.	Motor Output (w)	Width (mm)	Repeatability (mm)	Ball Screw Spec		Reduce Ratio	Maximum Payload(kg)		Maximum Speed (mm/s)
						Outer Diameter (mm)	Lead(mm)		Horizontal	Vertical	
Standard	Ball screw	ETH2-14	400W	130	±0.005	14	6	-	110	40	360
							12	-	88	26	720
							24	-	40	20	1440
		ETH2-17	400W	152	±0.005	20	5	-	120	50	300
							10	-	110	30	600
							20	-	75	17	1200
							40	-	15	15	2400
		ETH2-22	750W	212	±0.005	25	5	-	150	60	300
							10	-	150	35	600
							25	-	100	18	1500
		ETH2-30	1500W	300	±0.005	32	10	-	250	48	400
							20	-	200	25	800
							32	-	105	12	1280
			750W	300	±0.005	32	10	3:1	400	130	200
							20		300	65	400
							32		180	38	640
							10	5:1	400	200	120
							20		300	110	240
							32		180	60	384

* Some specifications require an external regenerative resistor to reach the maximum load. For details, please refer to the data sheet of each product.

Dual Carriage Reverse Direction

Env.	Drive Type	Spec.	Motor Output (w)	Width (mm)	Repeatability (mm)	Ball Screw Spec		Reduce Ratio	Maximum Payload(kg)		Maximum Speed (mm/s)
						Outer Diameter (mm)	Lead(mm)		Horizontal	Vertical	
Standard	Ball screw	ETH2-14D	400W	130	±0.005	14	6	-	110	40	360
							12	-	88	26	720
							24	-	40	20	1440
		ETH2-17D	400W	152	±0.005	20	5	-	120	50	300
							10	-	110	30	600
							20	-	75	17	1200
							40	-	15	15	2400
		ETH2-22D	750W	212	±0.005	25	5	-	150	60	300
							10	-	150	35	600
							25	-	100	18	1500
		ETH2-30D	1500W	300	±0.005	32	10	-	250	48	400
							20	-	200	25	800
							32	-	105	12	1280
			750W	300	±0.005	32	10	3:1	400	130	200
							20		300	65	400
							32		180	38	640
							10	5:1	400	200	120
							20		300	110	240
							32		180	60	384

*Some specifications require an external regenerative resistor to reach the maximum load. For details, please refer to the data sheet of each product.

免費服務專線：台灣 0800-800-893
Toll-Free Number Taiwan

Stroke(mm) & Maximum Speed(mm/s) ■ Speed

Stroke	50	500	550	600	650	700	750	800	850	900	950	1000	1050	1100	1150	1200	1250	1300	1350	1400	1450	1500	1550	1600	1650	1700	1750	1800	1850	1900	1950	2000	2050	2100	Page
360			340	300	260	230	210	180	160	150	130	120	110		100	90																			
720			680	600	520	460	420	360	320	300	260	240	220		200	180																			-
1440			1360	1200	1040	920	840	720	640	600	520	480	440		400	360																			
300						275	250	225	200	183	167	150	142	133	117	108	100	92		83	75														
600						550	500	450	400	367	333	300	283	267	233	217	200	183		167	150														
1200						1100	1000	900	800	733	667	600	567	533	467	433	400	367		333	300														-
2400						2200	2000	1800	1600	1467	1333	1200	1133	1067	933	867	800	733		667	600														
300							275	250	233	208	192	175	167	150	142	133	125	117	108	100	92		83	75		67									
600							550	500	467	417	383	350	333	300	283	267	250	233	217	200	183		167	150		133									-
1500							1375	1250	1167	1042	958	875	833	750	708	667	625	583	542	500	458		417	375		333									
							400												383	367	333	317	300	283	267	250	233	217	200	183	167				
							800												767	733	667	633	600	567	533	500	467	433	400	367	333				-
							1280												1227	1173	1067	1013	960	907	853	800	747	693	640	587					
													200																	183	167				
													400																	367	333				-
													640																	587	533				
															120																				
															240																				-
															384																				

Stroke(mm) & Maximum Speed(mm/s) ■ Speed

Stroke	50	150	200	250	300	350	400	450	500	550	600	650	700	750	800	850	900	950	1000	1050	1100	1150	1200	1250	1300	1350	1400	1450	1500	1550	1600	1650	1700	1750	Page
360							340	300	260	230	210	180	160	150	130	120	110		100	90															
720							680	600	520	460	420	360	320	300	260	240	220		200	180															-
1440							1360	1200	1040	920	840	720	640	600	520	480	440		400	360															
300									275	250	225	200	183	167	150	142	133	117	108	100	92		83	75											
600									550	500	450	400	367	333	300	283	267	233	217	200	183		167	150											
1200									1100	1000	900	800	733	667	600	567	533	467	433	400	367		333	300											-
2400									2200	2000	1800	1600	1467	1333	1200	1133	1067	933	867	800	733		667	600											
300									275	250	233	208	192	175	167	150	142	133	125	117	108	100	92		83	75		67							
600									550	500	467	417	383	350	333	300	283	267	250	233	217	200	183		167	150		133							-
1500									1375	1250	1167	1042	958	875	833	750	708	667	625	583	542	500	458		417	375		333							
							400												383	367	333	317	300	283	267	250	233	217	200	183	167				
							800												767	733	667	633	600	567	533	500	467	433	400	367	333				-
							1280												1227	1173	1067	1013	960	907	853	800	747	693	640	587	533				
													200																	183	167				
													400																	367	333				-
													640																	587	533				
															120																				
															240																				-
															384																				

ETH2-14 1-axis

Ball Screw Drive

Max. stroke	Max. Speed	Motor Output	Ball Screw	Linear Guide
1200mm	1440mm/s	400W	ø14mm	15X12.5-2pcs

Ordering Method

ETH2-14 - L6 - 500 - BC - T40B - C3N5L - [Refer to the right page.] - 0001

Model | Options | Customization Order No.

Stroke

50-1200mm
50 mm Pitch

Sensor location

L	Left side
R	Right side

Ball Screw Lead

6	6mm
12	12mm
24	24mm

Motor Position

BC	Motor Exposed
BL	Motor Left Side
BR	Motor Right Side
BM	Motor Bottom Side

Motor Brand、Power Output

M	Mitsubishi	10	-	B
P	Panasonic	20	-	
Y	Yaskawa	40	400W	
T	Delta	75	-	

*If No Brake,No Description.

Home Sensor

Out Side	
C	Motor Side
D	Opposite Motor Side
No Sensor	
E	No Sensor

Limit Sensor

Out Side	
3	1 Pc
4	2 Pcs
6	3 Pcs
7	4 Pcs
8	5 Pcs
9	6 Pcs
No Sensor	
5	No Sensor

*When the stroke is 50mm, Home + limit sensors is 2 maximum (only C3/D3/E3/E4/E5 can be selected)

Output type & Cable length

N5	NPN+5M Cable
P2	PNP+2M Cable
P5	PNP+5M Cable
-	NPN+2M Cable

Specification

Performance	Repeatability		mm	±0.005					
	Lead		mm	6		12		24	
	Maximum Rotating speed		rpm	3600	3000	3600	3000	3600	3000
	Maximum linear speed ※1		mm/s	360	300	720	600	1440	1200
	Maximum Payload	Horizontal	kg	110	110	88	88	40	50
		Vertical (No regenerative resistor)	kg	29	33	15	16	9	10
		Vertical (External 200W regenerative resistor)	kg	40	40	26	26	20	20
	Rated Thrust		N	1130		565		283	
	Stroke (increments)		mm	50-1200mm/ (50 increments)					
	Maximum acceleration		G	0.18	0.15	0.37	0.31	0.73	0.61
	Ball screw	Basic dynamic load rating Ca	N	7740		5866		3012	
		Basic static load rating Coa	N	14215		10408		5415	
	Linear Guide	Dynamic horizontal (100km)	N	29573					
		Static Horizontal	N	63504					
	Fixed bearing	Basic dynamic load rating Cr	N	8447					
		Static load rating Cor	N	5060					
Parts	AC Servo Motor Output		W	400					
	Ball Screw Ø		mm	C7Ø14					
	High Rigidity Linear Guide		mm	W15XH12.5					
	Coupling		mm	14X10					
	Home Sensor	Outside		T64N(NPN)					

※1 During in a long stroke, it causes ballscrew deflection, the speed must reduce. (Please refer to the linear velocity from the data sheet below the dimension graph.)

Allowable Overhang

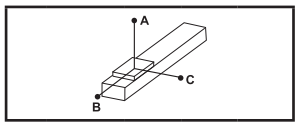

(Unit : mm)

Horizontal Installation		A	B	C
Lead 6	60kg	1600	137	140
	70kg	1340	112	115
	110kg	769	58	60
Lead 12	30kg	1142	264	247
	60kg	519	114	107
	88kg	319	66	62
Lead 24	20kg	454	271	188
	40kg	202	117	82
	50kg	151	86	60

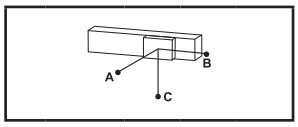

(Unit : mm)

Wall Installation		A	B	C
Lead 6	60kg	140	137	1600
	70kg	115	112	1340
	110kg	60	58	769
Lead 12	30kg	247	264	1142
	60kg	107	114	519
	88kg	62	66	319
Lead 24	20kg	188	271	454
	40kg	82	117	202
	50kg	60	86	151

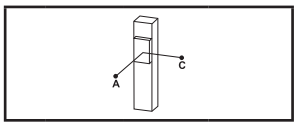

(Unit : mm)

Vertical Installation		A	C
Lead 6	25kg	388	388
	30kg	324	324
	40kg	243	243
Lead 12	10kg	781	781
	15kg	520	520
	26kg	300	300
Lead 24	9kg	485	485
	10kg	437	437
	20kg	218	218

Static Loading Moment

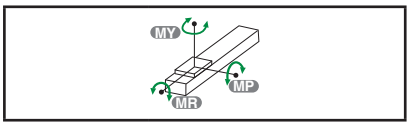

(Unit : N.m)

MY	479
MP	479
MR	423

* The data represented by the moment table is the center of gravity of the load.The length of the overhang is allowed in a single direction.
*Operation life is 10,000km when the product is using under the specified conditions.
*Data information is not for ceiling-mount inverse use. Contact us for the details if you want to apply ceiling-mount inverse usage.
*The life and torque are calculated by setting the motor acceleration and deceleration for 0.2 seconds.

Options

P - MM - CMK

Standard PIN hole		
Code	Instructions	Refer to
P	Standard PIN hole	P.677

Selectable Cable Leading Direction		
Code	Instructions	Refer to
MW	Upper side	P.679 ~ P.680
MM	Bottom side	
ML	Left side	
MR	Right side	

Additional keyway for motor drive parts				
Code	Instructions			Refer to
	Keyway Groove	Motor Position	Shipment Type	
CMK	Single (Limited to the motor side)	BC/M	Keyway Coupling	P.681 ~ P.682
		BL/BR/BM	Keyway Belt Pulley	
SKY	Double	BC/M	Keyway Coupling	
		BL/BR/BM	Keyway Belt Pulley	
SKN	Double	BC/M	Without Coupling (Please purchase and install by yourself)	
		BL/BR/BM	Without Belt Pulley (Please purchase and install by yourself)	

2D CAD 3D CAD • Download at www.toyorobot.com •

BC Motor Exposed (Sensor on the left sdie)

Unit : mm

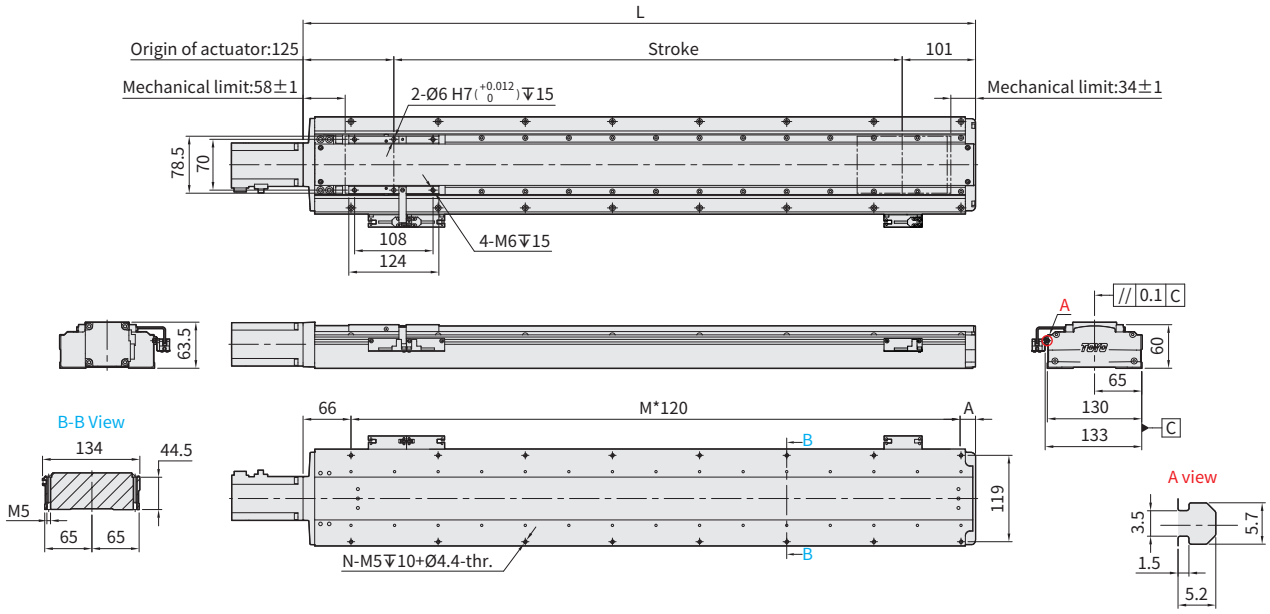

BC Motor Exposed (Sensor on the right side)

Unit : mm

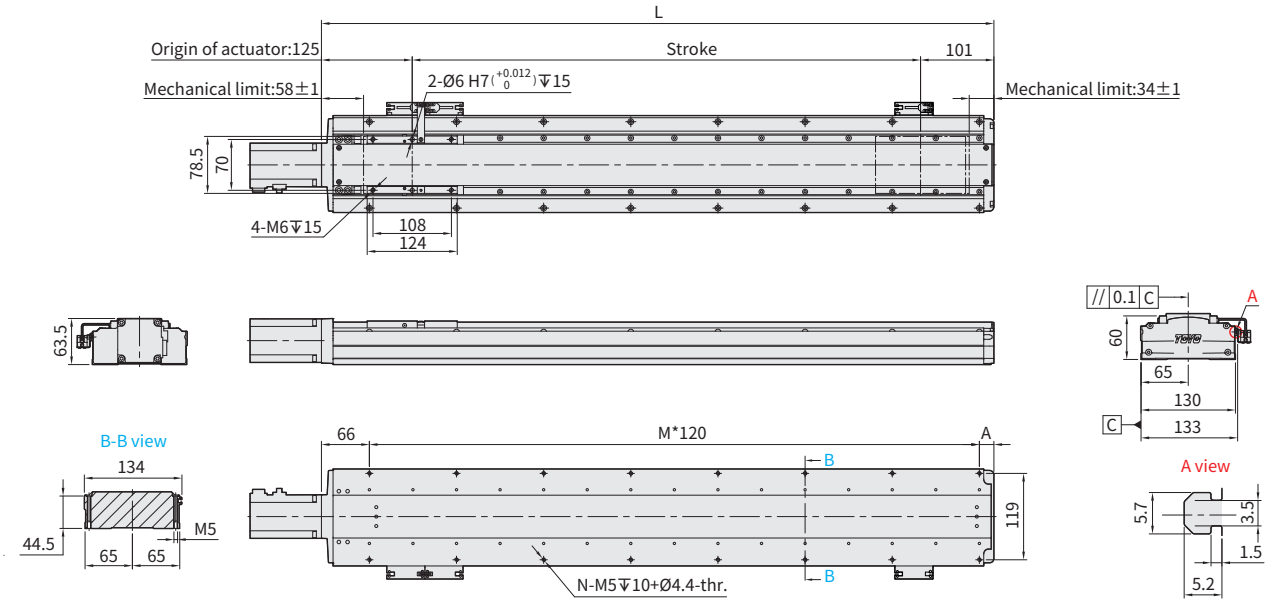

Stroke		50	100	150	200	250	300	350	400	450	500	550	600	650	700	750	800	850	900	950	1000	1050	1100	1150	1200
Limit Stroke (±1)		60	110	160	210	260	310	360	410	460	510	560	610	660	710	760	810	860	910	960	1010	1060	1110	1160	1210
L		276	326	376	426	476	526	576	626	676	726	776	826	876	926	976	1026	1076	1126	1176	1226	1276	1326	1376	1426
A		90	20	70	120	50	100	30	80	130	60	110	40	90	20	70	120	50	100	30	80	130	60	110	40
M		1	2	2	2	3	3	4	4	4	5	5	6	6	7	7	7	8	8	9	9	9	10	10	11
N		4	6	6	6	8	8	10	10	10	12	12	14	14	16	16	16	18	18	20	20	20	22	22	24
KG		4.07	4.54	5.01	5.48	5.96	6.43	6.91	7.38	7.85	8.32	8.79	9.27	9.74	10.21	10.68	11.15	11.63	12.1	12.58	13.05	13.52	13.99	14.46	14.94
Linear Speed mm/s	Lead 6	360										340	300	260	230	210	180	160	150	130	120	110		100	90
	Lead 12	720										680	600	520	460	420	360	320	300	260	240	220		200	180
	Lead 24	1440										1360	1200	1040	920	840	720	640	600	520	480	440		400	360

免費服務專線：台灣 0800-800-893
Toll-Free Number Taiwan

2D CAD 3D CAD

• Download at www.toyorobot.com •

BL Motor Left Side (Sensor on the left sdie)

Unit : mm

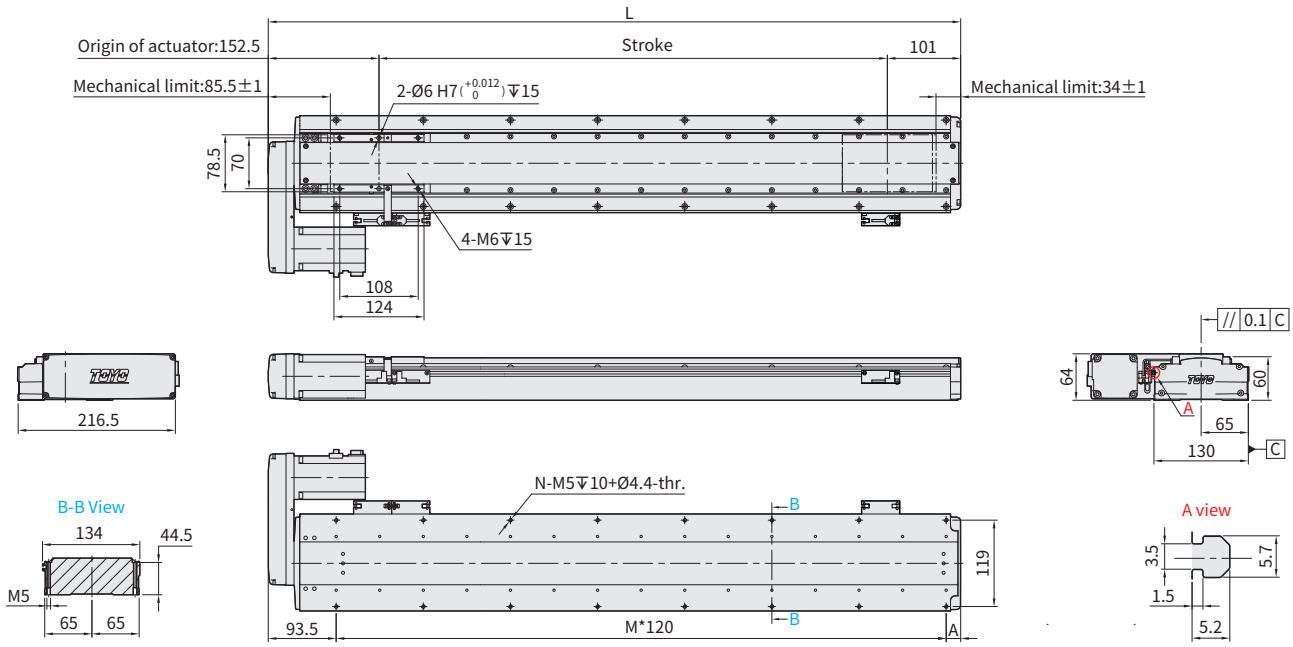

BL Motor Left Side (Sensor on the right side)

Unit : mm

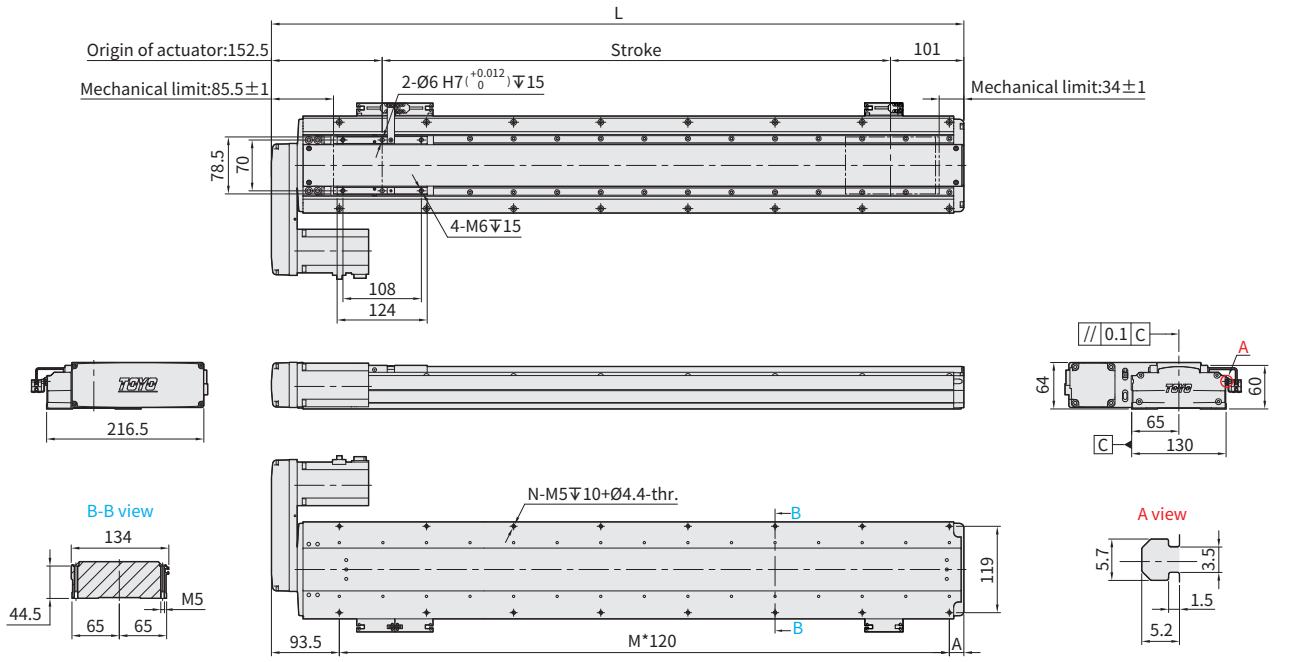

Stroke		50	100	150	200	250	300	350	400	450	500	550	600	650	700	750	800	850	900	950	1000	1050	1100	1150	1200
Limit Stroke (±1)		60	110	160	210	260	310	360	410	460	510	560	610	660	710	760	810	860	910	960	1010	1060	1110	1160	1210
L		303.5	353.5	403.5	453.5	503.5	553.5	603.5	653.5	703.5	753.5	803.5	853.5	903.5	953.5	1003.5	1053.5	1103.5	1153.5	1203.5	1253.5	1303.5	1353.5	1403.5	1453.5
A		90	20	70	120	50	100	30	80	130	60	110	40	90	20	70	120	50	100	30	80	130	60	110	40
M		1	2	2	2	3	3	4	4	4	5	5	6	6	7	7	7	8	8	9	9	9	10	10	11
N		4	6	6	6	8	8	10	10	10	12	12	14	14	16	16	16	18	18	20	20	20	22	22	24
KG		4.58	5.06	5.53	6	6.48	6.95	7.42	7.89	8.37	8.84	9.31	9.78	10.25	10.73	11.2	11.67	12.15	12.62	13.09	13.56	14.04	14.51	14.98	15.45
Linear Speed mm/s	Lead 6	360										340	300	260	230	210	180	160	150	130	120	110		100	90
	Lead 12	720										680	600	520	460	420	360	320	300	260	240	220		200	180
	Lead 24	1440										1360	1200	1040	920	840	720	640	600	520	480	440		400	360

2D CAD 3D CAD • Download at www.toyorobot.com •

BR Motor Right Side (Sensor on the left sdie)

Unit : mm

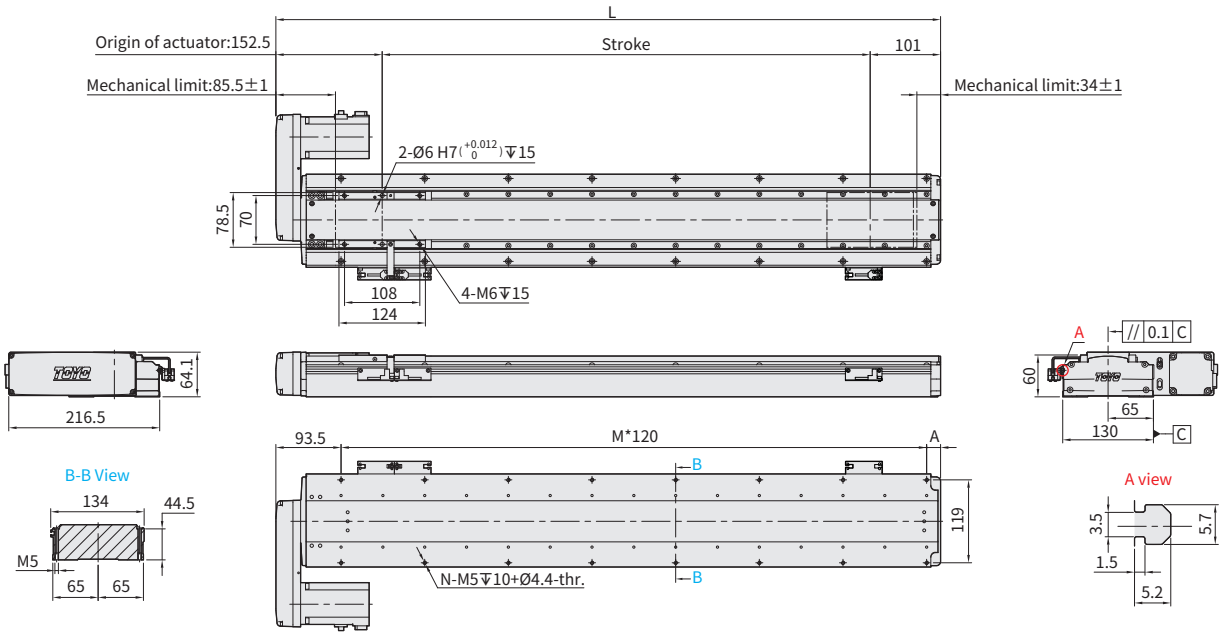

BR Motor Right Side (Sensor on the right side)

Unit : mm

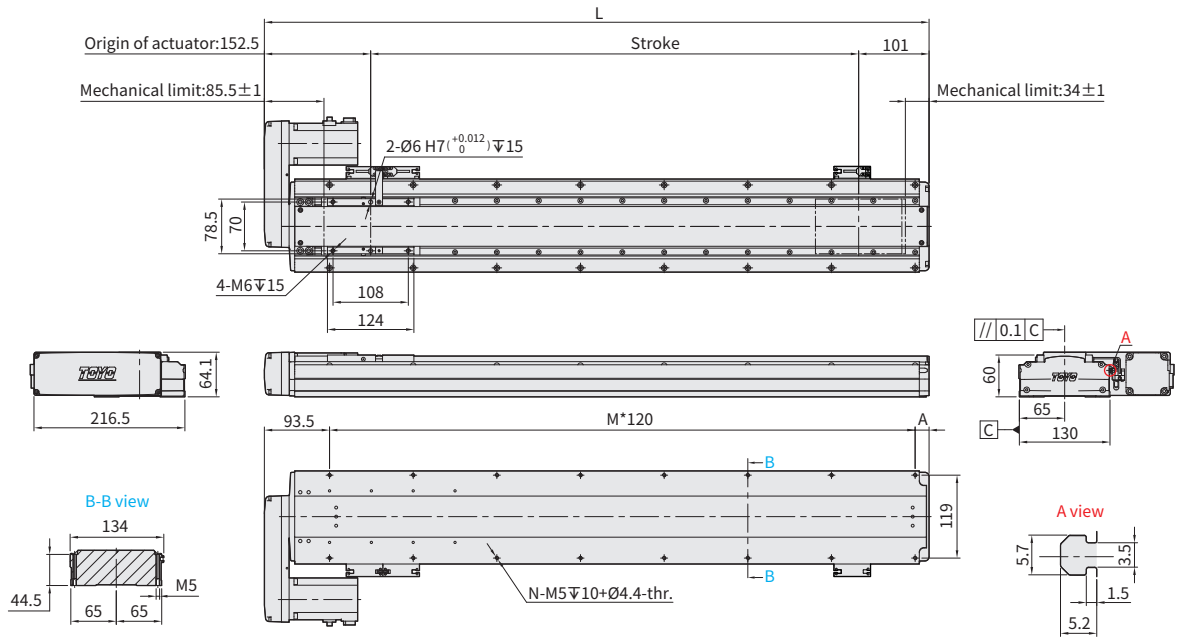

Stroke		50	100	150	200	250	300	350	400	450	500	550	600	650	700	750	800	850	900	950	1000	1050	1100	1150	1200
Limit Stroke (±1)		60	110	160	210	260	310	360	410	460	510	560	610	660	710	760	810	860	910	960	1010	1060	1110	1160	1210
L		303.5	353.5	403.5	453.5	503.5	553.5	603.5	653.5	703.5	753.5	803.5	853.5	903.5	953.5	1003.5	1053.5	1103.5	1153.5	1203.5	1253.5	1303.5	1353.5	1403.5	1453.5
A		90	20	70	120	50	100	30	80	130	60	110	40	90	20	70	120	50	100	30	80	130	60	110	40
M		1	2	2	2	3	3	4	4	4	5	5	6	6	7	7	7	8	8	9	9	9	10	10	11
N		4	6	6	6	8	8	10	10	10	12	12	14	14	16	16	16	18	18	20	20	20	22	22	24
KG		4.58	5.06	5.53	6	6.48	6.95	7.42	7.89	8.37	8.84	9.31	9.78	10.25	10.73	11.2	11.67	12.15	12.62	13.09	13.56	14.04	14.51	14.98	15.45
Linear Speed mm/s	Lead 6	360										340	300	260	230	210	180	160	150	130	120	110		100	90
	Lead 12	720										680	600	520	460	420	360	320	300	260	240	220		200	180
	Lead 24	1440										1360	1200	1040	920	840	720	640	600	520	480	440		400	360

免費服務專線：台灣 Toll-Free Number Taiwan 0800-800-893

2D CAD 3D CAD • Download at www.toyorobot.com •

BM Motor Bottom Side (Sensor on the left sdie)

Unit : mm

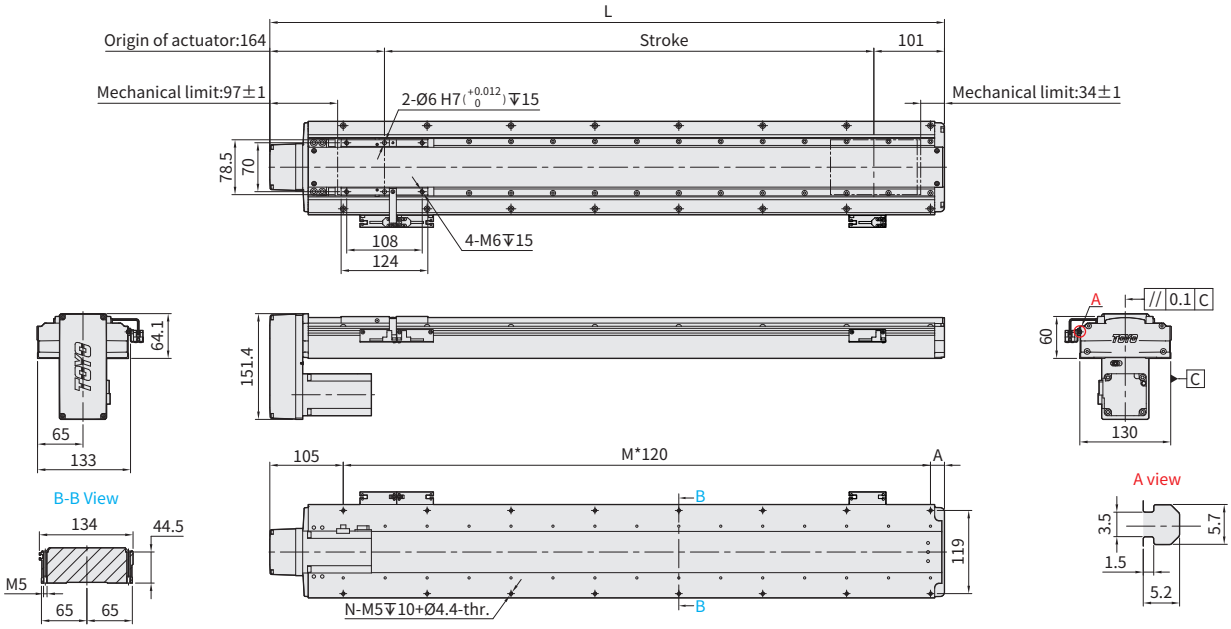

BM Motor Bottom Side (Sensor on the right side)

Unit : mm

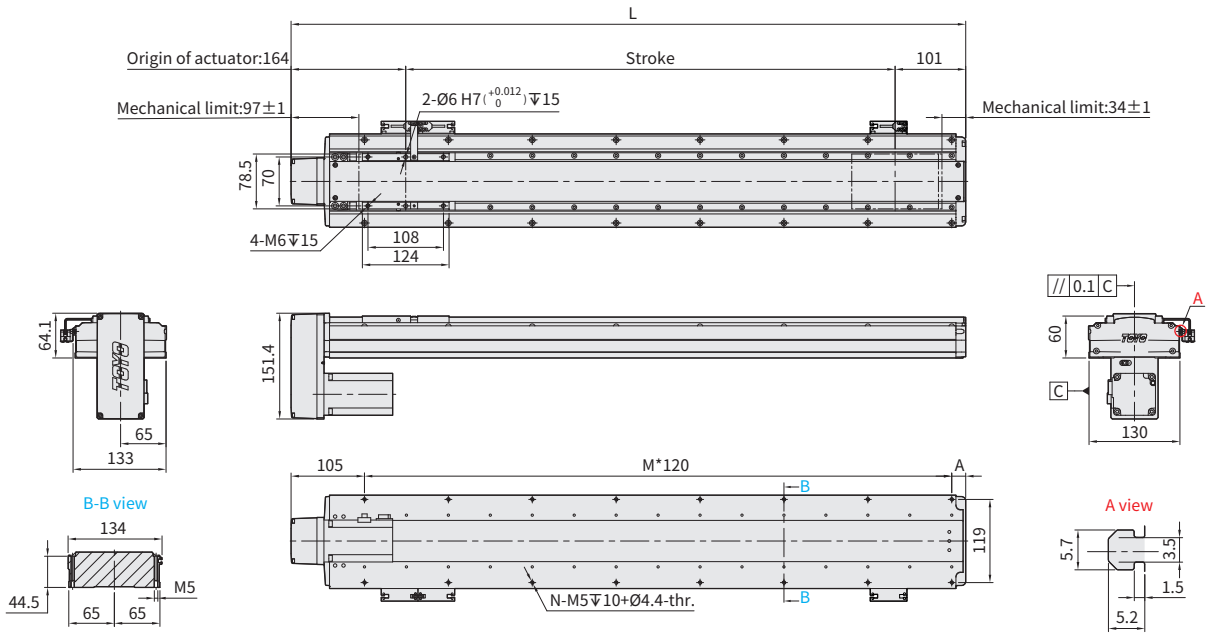

Stroke		50	100	150	200	250	300	350	400	450	500	550	600	650	700	750	800	850	900	950	1000	1050	1100	1150	1200
Limit Stroke (±1)		60	110	160	210	260	310	360	410	460	510	560	610	660	710	760	810	860	910	960	1010	1060	1110	1160	1210
L		315	365	415	465	515	565	615	665	715	765	815	865	915	965	1015	1065	1115	1165	1215	1265	1315	1365	1415	1465
A		90	20	70	120	50	100	30	80	130	60	110	40	90	20	70	120	50	100	30	80	130	60	110	40
M		1	2	2	2	3	3	4	4	4	5	5	6	6	7	7	7	8	8	9	9	9	10	10	11
N		4	6	6	6	8	8	10	10	10	12	12	14	14	16	16	16	18	18	20	20	20	22	22	24
KG		4.58	5.06	5.53	6	6.48	6.95	7.42	7.89	8.37	8.84	9.31	9.78	10.25	10.73	11.2	11.67	12.15	12.62	13.09	13.56	14.04	14.51	14.98	15.45
Linear Speed mm/s	Lead 6	360										340	300	260	230	210	180	160	150	130	120	110		100	90
	Lead 12	720										680	600	520	460	420	360	320	300	260	240	220		200	180
	Lead 24	1440										1360	1200	1040	920	840	720	640	600	520	480	440		400	400

ETH2-17 1-axis

Ball Screw Drive

Max. stroke	Max. Speed	Motor Output	Ball Screw	Linear Guide
1500mm	2400mm/s	400W	ø20mm	15X12.5-2pcs

Ordering Method

ETH2-17 - L5 - 500 - BC - T40B - C3N5L - [Refer to the right page.] - 0001

Model | Options | Customization Order No.

Stroke

50-1500mm
50 mm Pitch

Sensor location

L	Left side
R	Right side

Ball Screw Lead

5	5mm
10	10mm
20	20mm
40	40mm

Motor Position

BC	Motor Exposed
BL	Motor Left Side
BR	Motor Right Side
BM	Motor Bottom Side

Motor Brand、Power Output

M	Mitsubishi	10	-	B
P	Panasonic	20	-	
Y	Yaskawa	40	400W	
T	Delta	75	-	

*If No Brake,No Description.

Home Sensor

Out Side	
C	Motor Side
D	Opposite Motor Side
No Sensor	
E	No Sensor

Limit Sensor

Out Side	
3	1 Pc
4	2 Pcs
6	3 Pcs
7	4 Pcs
8	5 Pcs
9	6 Pcs
No Sensor	
5	No Sensor

*When the stroke is 50mm, Home + limit sensors is 2 maximum (only C3/D3/E3/E4/E5 can be selected)

Output type & Cable length

N5	NPN+5M Cable
P2	PNP+2M Cable
P5	PNP+5M Cable
-	NPN+2M Cable

Specification

Performance	Repeatability		mm	±0.005						
	Lead		mm	5		10		20		40	
	Maximum Rotating speed		rpm	3600	3000	3600	3000	3600	3000	3600	3000
	Maximum linear speed ※1		mm/s	300	250	600	500	1200	1000	2400	2000
	Maximum Payload	Horizontal	kg	120	120	110	110	75	85	15	22
		Vertical (No regenerative resistor)	kg	40	50	24	26	10	11	9	10
		Vertical (External 200W regenerative resistor)	kg	50	50	30	30	17	17	15	15
	Rated Thrust		N	1356		678		339		170	
	Stroke (increments)		mm	50-1500mm/(50 increments)							
	Maximum acceleration		G	0.15	0.13	0.31	0.25	0.61	0.51	1.22	1.02
	Ball screw	Basic dynamic load rating Ca	N	17795		10295		5414		6406	
		Basic static load rating Coa	N	45617		22964		10877		15667	
	Linear Guide	Dynamic horizontal (100km)	N	29573							
		Static Horizontal	N	63504							
	Fixed bearing	Basic dynamic load rating Cr	N	9666							
		Static load rating Cor	N	6400							
Parts	AC Servo Motor Output		W	400							
	Ball Screw Ø		mm	C7Ø20							
	High Rigidity Linear Guide		mm	W15XH12.5							
	Coupling		mm	14X12							
	Home Sensor	Outside		T64N2(NPN)							

※1 During in a long stroke, it causes ballscrew deflection, the speed must reduce. (Please refer to the linear velocity from the data sheet below the dimension graph.)

Allowable Overhang

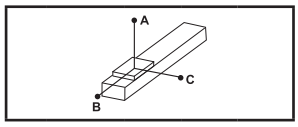

(Unit : mm)

Horizontal Installation		A	B	C
Lead 5	70kg	2782	165	155
	90kg	2077	116	109
	120kg	1452	74	70
Lead 10	65kg	1010	154	138
	85kg	728	106	95
	110kg	516	70	63
Lead 20	55kg	332	132	99
	75kg	219	83	63
	85kg	181	67	51
Lead 40	10kg	558	613	296
	15kg	358	391	189
	22kg	230	250	121

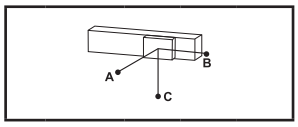

(Unit : mm)

Wall Installation		A	B	C
Lead 5	70kg	155	165	2782
	90kg	109	116	2077
	120kg	70	74	1452
Lead 10	65kg	138	154	1010
	85kg	95	106	728
	110kg	63	70	516
Lead 20	55kg	99	132	332
	75kg	63	83	219
	85kg	51	67	181
Lead 40	10kg	296	613	558
	15kg	189	391	358
	22kg	121	250	230

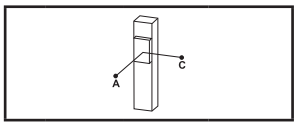

(Unit : mm)

Vertical Installation		A	C
Lead 5	30kg	483	483
	40kg	362	362
	50kg	290	290
Lead 10	24kg	508	508
	26kg	469	469
	30kg	406	406
Lead 20	10kg	806	806
	11kg	733	733
	17kg	474	474
Lead 40	9kg	420	420
	10kg	378	378
	15kg	252	252

Static Loading Moment

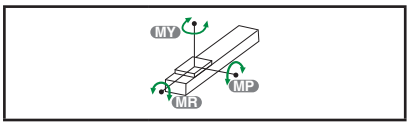

(Unit : N.m)

MY	680
MP	680
MR	537

* The data represented by the moment table is the center of gravity of the load.The length of the overhang is allowed in a single direction.
*Operation life is 10,000km when the product is using under the specified conditions.
*Data information is not for ceiling-mount inverse use. Contact us for the details if you want to apply ceiling-mount inverse usage.
*The life and torque are calculated by setting the motor acceleration and deceleration for 0.2 seconds.

Options

P - MM - CMK

Standard PIN hole

Code	Instructions	Refer to
P	Standard PIN hole	P.677

Selectable Cable Leading Direction

Code	Instructions	Refer to
MW	Upper side	P.679 ~ P.680
MM	Bottom side	
ML	Left side	
MR	Right side	

Additional keyway for motor drive parts

Code	Instructions			Refer to
	Keyway Groove	Motor Position	Shipment Type	
CMK	Single (Limited to the motor side)	BC/M	Keyway Coupling	P.681 ~ P.682
		BL/BR/BM	Keyway Belt Pulley	
SKY	Double	BC/M	Keyway Coupling	
		BL/BR/BM	Keyway Belt Pulley	
SKN	Double	BC/M	Without Coupling (Please purchase and install by yourself)	
		BL/BR/BM	Without Belt Pulley (Please purchase and install by yourself)	

2D CAD 3D CAD

• Download at www.toyorobot.com •

BC Motor Exposed (Sensor on the left sdie)

Unit : mm

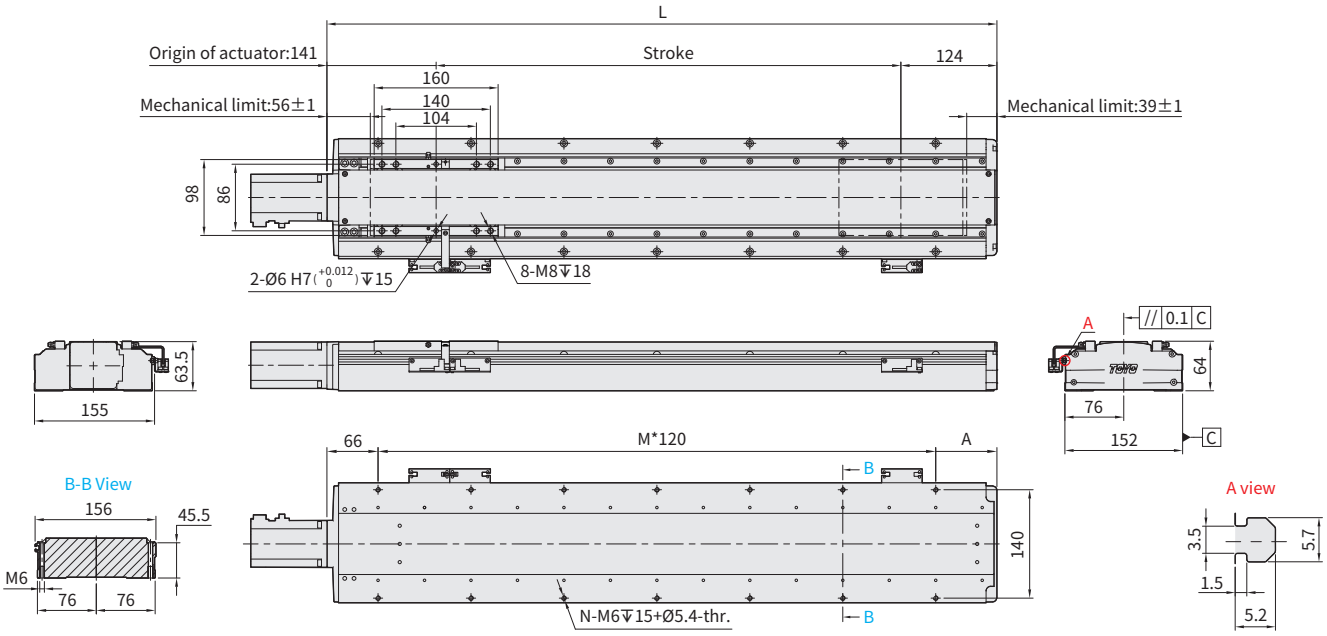

BC Motor Exposed (Sensor on the right side)

Unit : mm

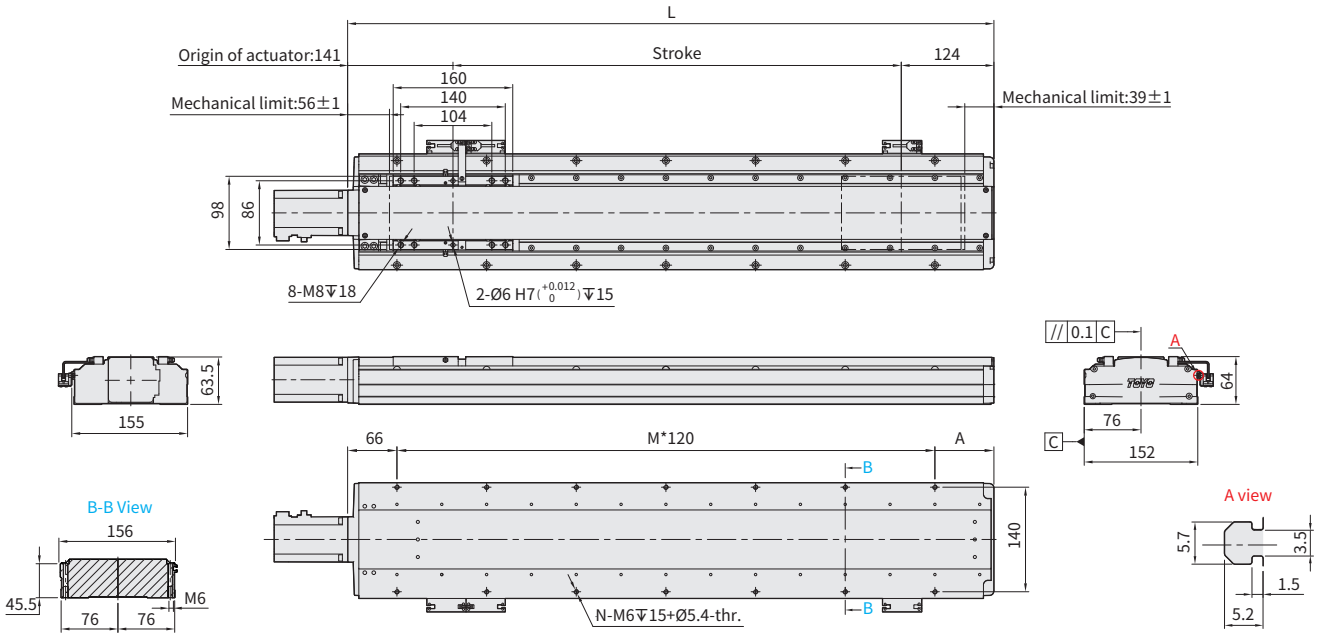

Stroke		50	100	150	200	250	300	350	400	450	500	550	600	650	700	750	800	850	900	950	1000	1050	1100	1150	1200	1250	1300	1350	1400	1450	1500
Limit Stroke (±1)		60	110	160	210	260	310	360	410	460	510	560	610	660	710	760	810	860	910	960	1010	1060	1110	1160	1210	1260	1310	1360	1410	1460	1510
L		315	365	415	465	515	565	615	665	715	765	815	865	915	965	1015	1065	1115	1165	1215	1265	1315	1365	1415	1465	1515	1565	1615	1665	1715	1765
A		129	59	109	39	89	19	69	119	49	99	29	79	129	59	109	39	89	19	69	119	49	99	29	79	129	59	109	39	89	19
M		1	2	2	3	3	4	4	4	5	5	6	6	6	7	7	8	8	9	9	9	10	10	11	11	11	12	12	13	13	14
N		4	6	6	8	8	10	10	10	12	12	14	14	14	16	16	18	18	20	20	20	22	22	24	24	24	26	26	28	28	30
KG		5.94	6.52	7.1	7.68	8.26	8.84	9.42	9.99	10.58	11.15	11.74	12.31	12.9	13.47	14.05	14.63	15.21	15.79	16.37	16.95	17.53	18.11	18.69	19.27	19.85	20.43	21	21.59	22.16	22.75
Linear Speed mm/s	Lead 5	300													275	250	225	200	183	167	150	142	133	117	108	100	92		83	75	
	Lead 10	600													550	500	450	400	367	333	300	283	267	233	217	200	183		167	150	
	Lead 20	1200													1100	1000	900	800	733	667	600	567	533	467	433	400	367		333	300	
	Lead 40	2400													2200	2000	1800	1600	1467	1333	1200	1133	1067	933	867	800	733		667	600	

免費服務專線：台灣 Toll-Free Number Taiwan 0800-800-893

2D CAD 3D CAD • Download at www.toyorobot.com •

BL Motor Left Side (Sensor on the left sdie)

Unit : mm

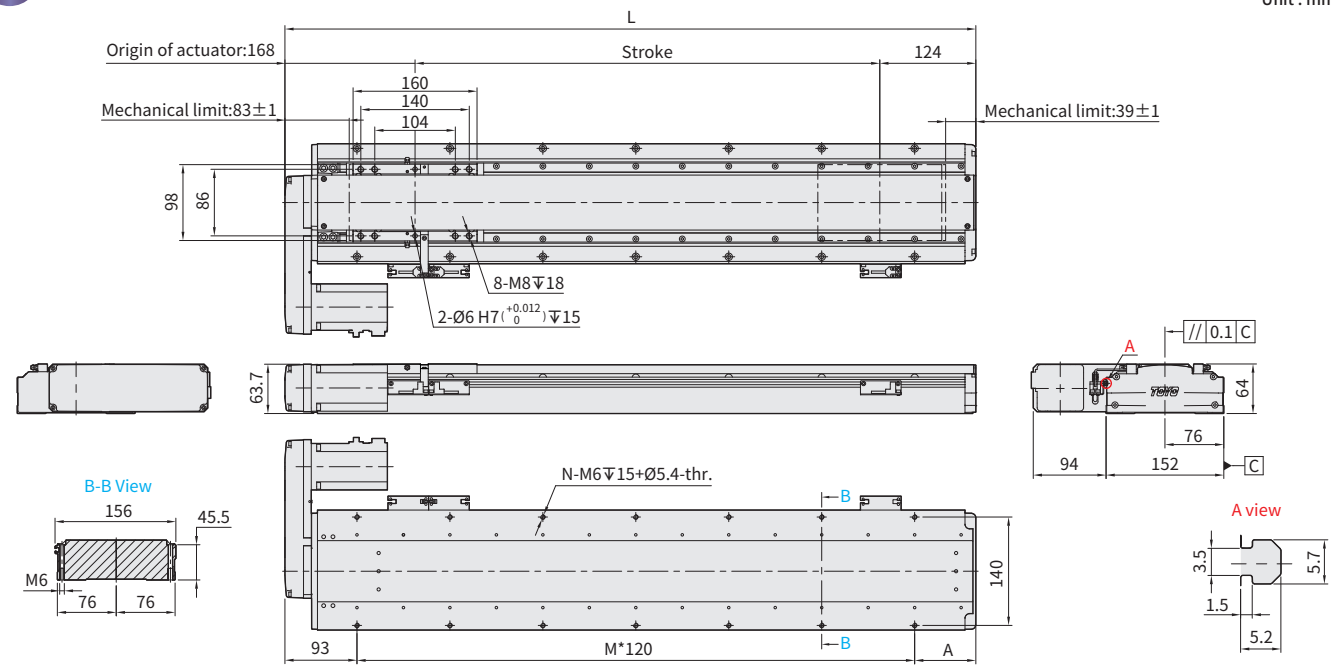

BL Motor Left Side (Sensor on the right side)

Unit : mm

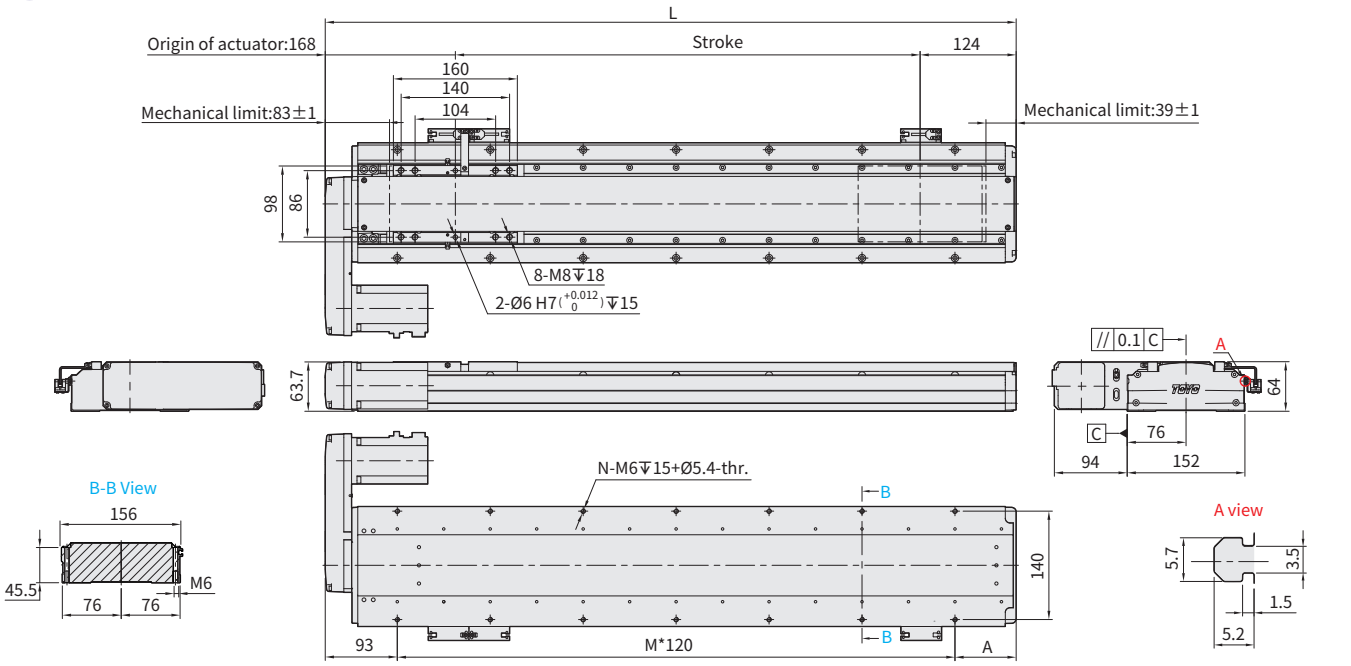

Stroke		50	100	150	200	250	300	350	400	450	500	550	600	650	700	750	800	850	900	950	1000	1050	1100	1150	1200	1250	1300	1350	1400	1450	1500
Limit Stroke (±1)		60	110	160	210	260	310	360	410	460	510	560	610	660	710	760	810	860	910	960	1010	1060	1110	1160	1210	1260	1310	1360	1410	1460	1510
L		342	392	442	492	542	592	642	692	742	792	842	892	942	992	1042	1092	1142	1192	1242	1292	1342	1392	1442	1492	1542	1592	1642	1692	1742	1792
A		129	59	109	39	89	19	69	119	49	99	29	79	129	59	109	39	89	19	69	119	49	99	29	79	129	59	109	39	89	19
M		1	2	2	3	3	4	4	4	5	5	6	6	6	7	7	8	8	9	9	9	10	10	11	11	11	12	12	13	13	14
N		4	6	6	8	8	10	10	10	12	12	14	14	14	16	16	18	18	20	20	20	22	22	24	24	24	26	26	28	28	30
KG		6.54	7.12	7.7	8.28	8.86	9.44	10.02	10.6	11.18	11.76	12.34	12.92	13.5	14.08	14.65	15.24	15.81	16.4	16.97	17.55	18.13	18.71	19.29	19.87	20.45	21.03	21.61	22.19	22.77	23.35
Linear Speed mm/s	Lead 5	300													275	250	225	200	183	167	150	142	133	117	108	100	92		83	75	
	Lead 10	600													550	500	450	400	367	333	300	283	267	233	217	200	183		167	150	
	Lead 20	1200													1100	1000	900	800	733	667	600	567	533	467	433	400	367		333	300	
	Lead 40	2400													2200	2000	1800	1600	1467	1333	1200	1133	1067	933	867	800	733		667	600	

2D CAD 3D CAD • Download at www.toyorobot.com •

BR Motor Right Side (Sensor on the left sdie)

Unit : mm

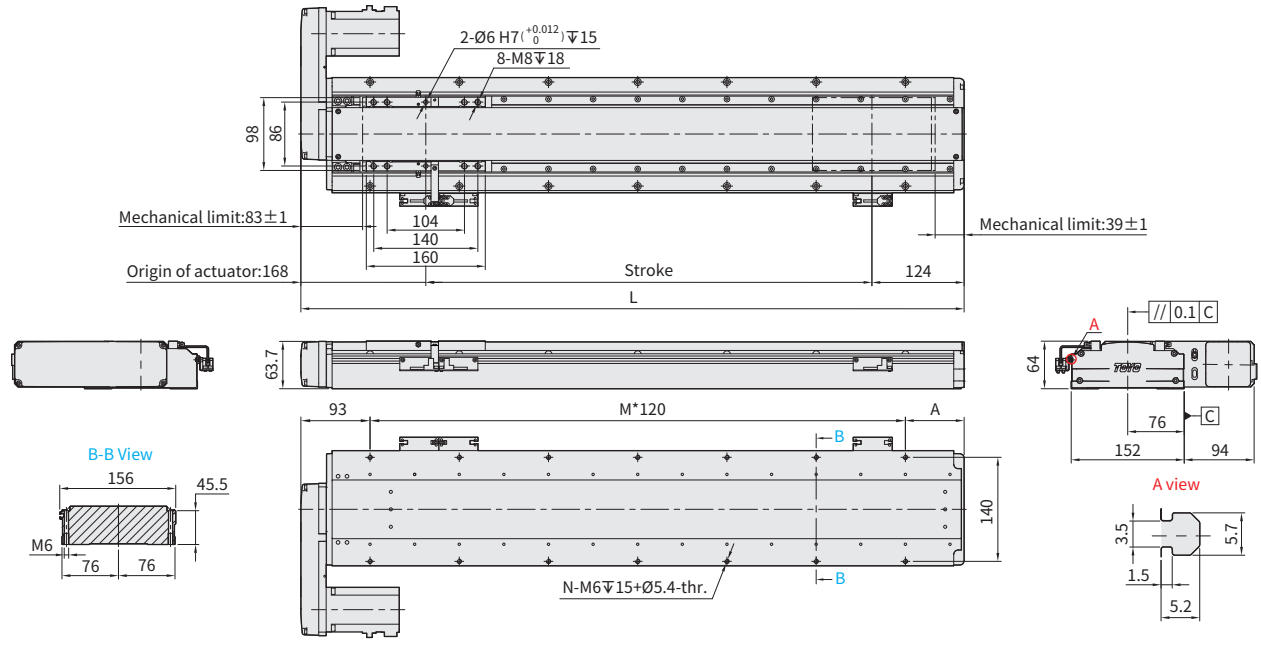

BR Motor Right Side (Sensor on the right side)

Unit : mm

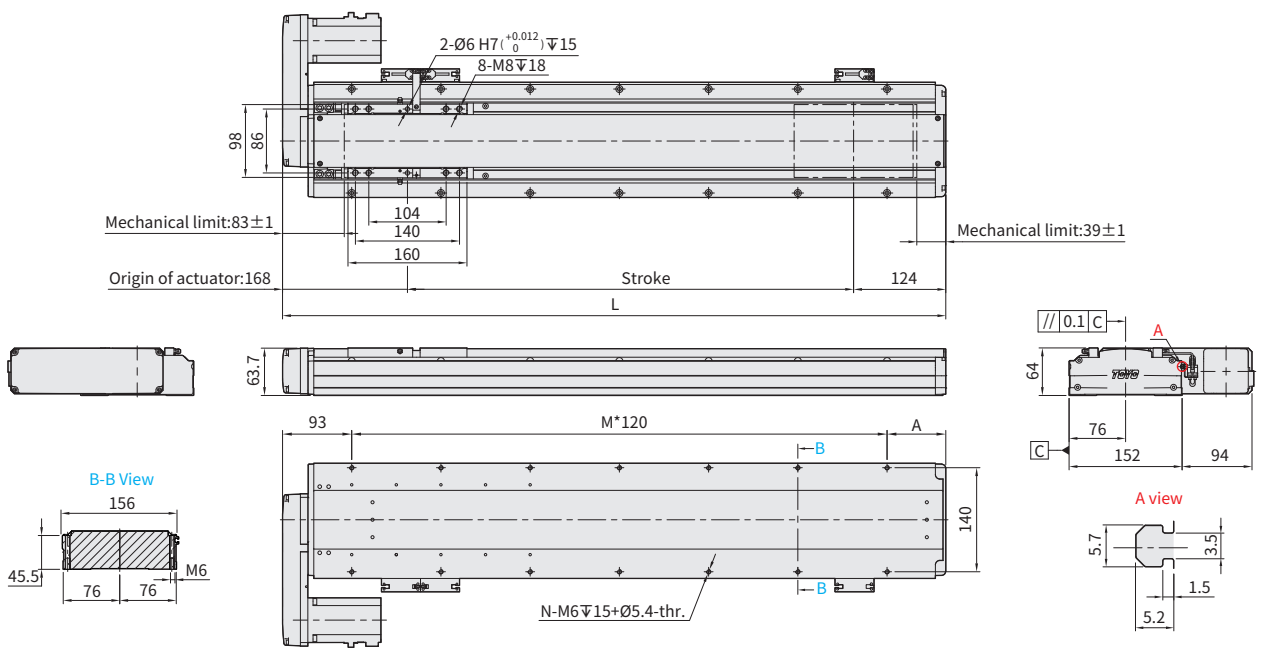

Stroke		50	100	150	200	250	300	350	400	450	500	550	600	650	700	750	800	850	900	950	1000	1050	1100	1150	1200	1250	1300	1350	1400	1450	1500
Limit Stroke (±1)		60	110	160	210	260	310	360	410	460	510	560	610	660	710	760	810	860	910	960	1010	1060	1110	1160	1210	1260	1310	1360	1410	1460	1510
L		342	392	442	492	542	592	642	692	742	792	842	892	942	992	1042	1092	1142	1192	1242	1292	1342	1392	1442	1492	1542	1592	1642	1692	1742	1792
A		129	59	109	39	89	19	69	119	49	99	29	79	129	59	109	39	89	19	69	119	49	99	29	79	129	59	109	39	89	19
M		1	2	2	3	3	4	4	4	5	5	6	6	6	7	7	8	8	9	9	9	10	10	11	11	11	12	12	13	13	14
N		4	6	6	8	8	10	10	10	12	12	14	14	14	16	16	18	18	20	20	20	22	22	24	24	24	26	26	28	28	30
KG		6.54	7.12	7.7	8.28	8.86	9.44	10.02	10.6	11.18	11.76	12.34	12.92	13.5	14.08	14.65	15.24	15.81	16.4	16.97	17.55	18.13	18.71	19.29	19.87	20.45	21.03	21.61	22.19	22.77	23.35
Linear Speed mm/s	Lead 5	300													275	250	225	200	183	167	150	142	133	117	108	100	92		83	75	
	Lead 10	600													550	500	450	400	367	333	300	283	267	233	217	200	183		167	150	
	Lead 20	1200													1100	1000	900	800	733	667	600	567	533	467	433	400	367		333	300	
	Lead 40	2400													2200	2000	1800	1600	1467	1333	1200	1133	1067	933	867	800	733		667	600	

免費服務專線：台灣 Toll-Free Number Taiwan 0800-800-893

2D CAD 3D CAD

• Download at www.toyorobot.com •

BM Motor Bottom Side (Sensor on the left sdie)

Unit : mm

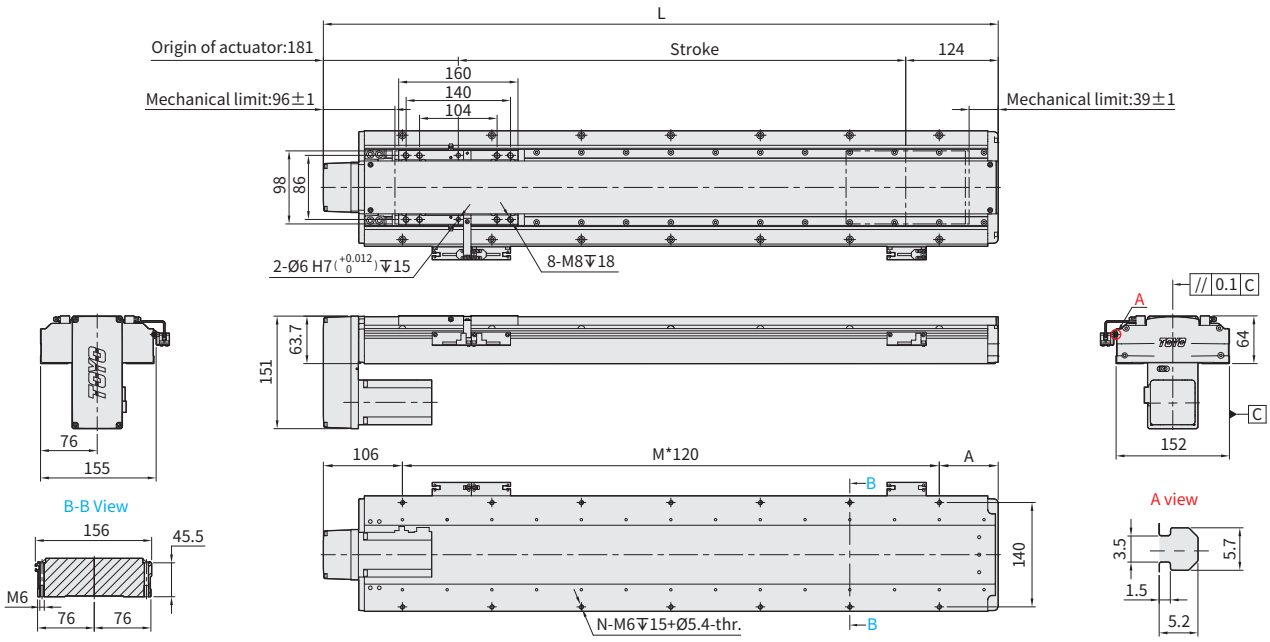

BM Motor Bottom Side (Sensor on the left sdie)

Unit : mm

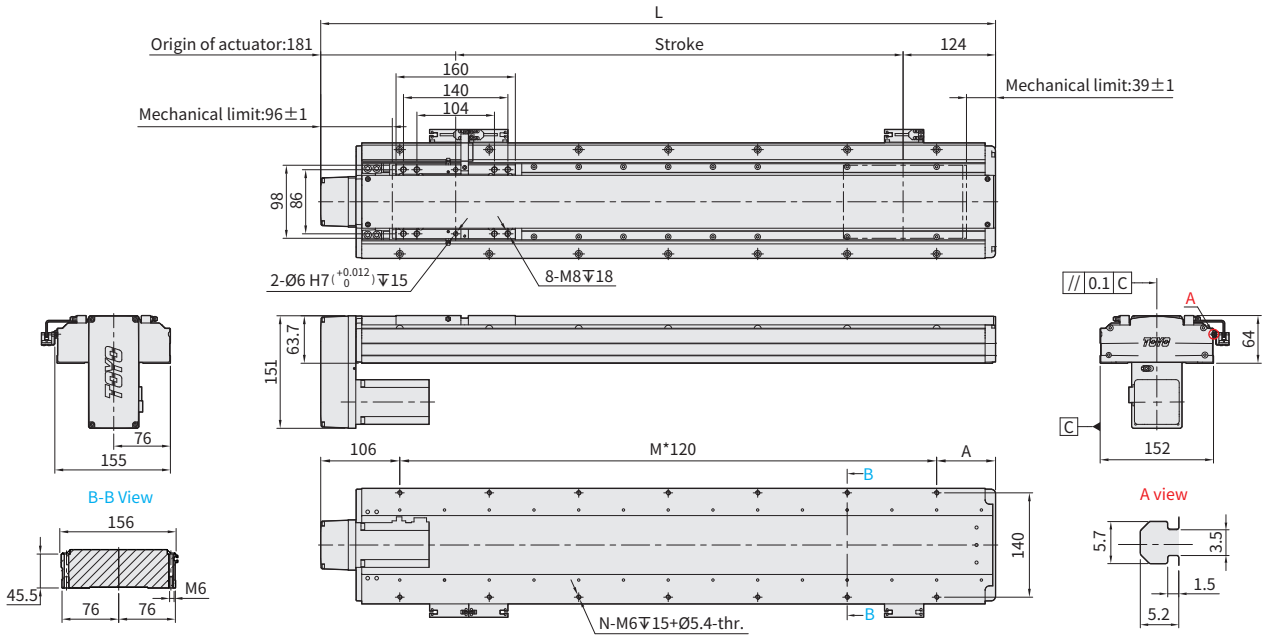

Stroke		50	100	150	200	250	300	350	400	450	500	550	600	650	700	750	800	850	900	950	1000	1050	1100	1150	1200	1250	1300	1350	1400	1450	1500
Limit Stroke (±1)		60	110	160	210	260	310	360	410	460	510	560	610	660	710	760	810	860	910	960	1010	1060	1110	1160	1210	1260	1310	1360	1410	1460	1510
L		355	405	455	505	555	605	655	705	755	805	855	905	955	1005	1055	1105	1155	1205	1255	1305	1355	1405	1455	1505	1555	1605	1655	1705	1755	1805
A		129	59	109	39	89	19	69	119	49	99	29	79	129	59	109	39	89	19	69	119	49	99	29	79	129	59	109	39	89	19
M		1	2	2	3	3	4	4	4	5	5	6	6	6	7	7	8	8	9	9	9	10	10	11	11	11	12	12	13	13	14
N		4	6	6	8	8	10	10	10	12	12	14	14	14	16	16	18	18	20	20	20	22	22	24	24	24	26	26	28	28	30
KG		6.54	7.12	7.7	8.28	8.86	9.44	10.02	10.6	11.18	11.76	12.34	12.92	13.5	14.08	14.65	15.24	15.81	16.4	16.97	17.55	18.13	18.71	19.29	19.87	20.45	21.03	21.61	22.19	22.77	23.35
Linear Speed mm/s	Lead 5	300													275	250	225	200	183	167	150	142	133	117	108	108	92		83	75	
	Lead 10	600													550	500	450	400	367	333	300	283	267	233	217	200	183		167	150	
	Lead 20	1200													1100	1000	900	800	733	667	600	567	533	467	433	400	367		333	300	
	Lead 40	2400													2200	2000	1800	1600	1467	1333	1200	1133	1067	933	867	800	733		667	600	

ETH2-22 1-axis

Ball Screw Drive

Max. stroke	Max. Speed	Motor Output	Ball Screw	Linear Guide
1800mm	1500mm/s	750W	ø25mm	20X16.3-2pcs

Ordering Method

ETH2-22 - L5 - 500 - BC - T75B - C3N5L - [Refer to the right page.] - 0001

Model | Options | Customization Order No.

Ball Screw Lead

5	5mm
10	10mm
25	25mm

Stroke

50-1800mm

50 mm Pitch

Motor Position

BC	Motor Exposed
BL	Motor Left Side
BR	Motor Right Side
BM	Motor Bottom Side

Motor Brand、Power Output

M	Mitsubishi	10	-	B
P	Panasonic	20	-	
Y	Yaskawa	40	-	
T	Delta	75	750W	

*If No Brake,No Description.

Home Sensor

Out Side	
C	Motor Side
D	Opposite Motor Side
No Sensor	
E	No Sensor

Limit Sensor

Out Side	
3	1 Pc
4	2 Pcs
6	3 Pcs
7	4 Pcs
8	5 Pcs
9	6 Pcs
No Sensor	
5	No Sensor

*When the stroke is 50mm, Home + limit sensors is 2 maximum (only C3/D3/E3/E4/E5 can be selected)

Sensor location

L	Left side
R	Right side

Output type & Cable length

N5	NPN+5M Cable
P2	PNP+2M Cable
P5	PNP+5M Cable
-	NPN+2M Cable

Specification

Performance	Repeatability		mm	±0.005					
	Lead		mm	5		10		25	
	Maximum Rotating speed		rpm	3600	3000	3600	3000	3600	3000
	Maximum linear speed ※1		mm/s	300	250	600	500	1500	1250
	Maximum Payload	Horizontal (No regenerative resistor)	kg	150	150	150	150	40	80
		Horizontal (External 200W regenerative resistor)	kg	-	-	-	-	100	105
		Vertical (No regenerative resistor)	kg	55	60	30	33	13	15
		Vertical (External 200W regenerative resistor)	kg	60	65	35	38	18	23
	Rated Thrust		N	2553		1276		511	
	Stroke (increments)		mm	50-1800mm/(50 increments)					
	Maximum acceleration		G	0.15	0.13	0.31	0.25	0.76	0.64
	Ball screw	Basic dynamic load rating Ca	N	11116		16069		8270	
		Basic static load rating Coa	N	27338		45450		21572	
	Linear Guide	Dynamic horizontal (100km)	N	45517					
		Static Horizontal	N	98820					
	Fixed bearing	Basic dynamic load rating Cr	N	22093					
		Static load rating Cor	N	15100					
Parts	AC Servo Motor Output		W	750					
	Ball Screw Ø		mm	C7Ø25					
	High Rigidity Linear Guide		mm	W20XH16.3					
	Coupling		mm	19X17					
	Home Sensor	Outside		T64N2(NPN)					

※1 During in a long stroke, it causes ballscrew deflection, the speed must reduce. (Please refer to the linear velocity from the data sheet below the dimension graph.)

Allowable Overhang

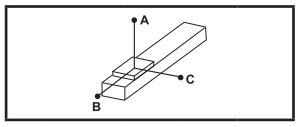

(Unit : mm)

Horizontal Installation		A	B	C
Lead 5	100kg	4520	264	258
	125kg	3505	196	191
	150kg	2824	151	147
Lead 10	100kg	1512	225	210
	125kg	1155	165	154
	150kg	914	125	116
Lead 25	40kg	721	398	279
	80kg	309	161	114
	105kg	209	105	75

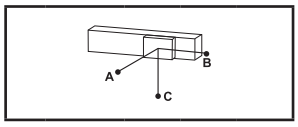

(Unit : mm)

Wall Installation		A	B	C
Lead 5	100kg	258	264	4520
	125kg	191	196	3505
	150kg	147	151	2824
Lead 10	100kg	210	225	1512
	125kg	154	165	1155
	150kg	116	125	914
Lead 25	40kg	279	398	721
	80kg	114	161	309
	105kg	75	105	209

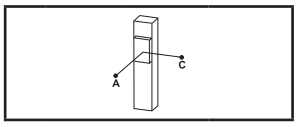

(Unit : mm)

Vertical Installation		A	C
Lead 5	55kg	591	591
	62kg	524	524
	65kg	500	500
Lead 10	30kg	915	915
	33kg	832	832
	38kg	722	722
Lead 25	13kg	1087	1087
	18kg	785	785
	23kg	614	614

Static Loading Moment

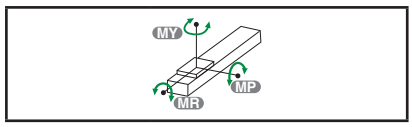

(Unit : N.m)

MY	1538
MP	1538
MR	1263

* The data represented by the moment table is the center of gravity of the load.The length of the overhang is allowed in a single direction.
*Operation life is 10,000km when the product is using under the specified conditions.
*Data information is not for ceiling-mount inverse use.
Contact us for the details if you want to apply ceiling-mount inverse usage.
*The life and torque are calculated by setting the motor acceleration and deceleration for 0.2 seconds.

Options

P - MM - CMK

Standard PIN hole

Code	Instructions	Refer to
P	Standard PIN hole	P.677

Selectable Cable Leading Direction

Code	Instructions	Refer to
MW	Upper side	P.679 ~ P.680
MM	Bottom side	
ML	Left side	
MR	Right side	

Additional keyway for motor drive parts

Code	Instructions			Refer to
	Keyway Groove	Motor Position	Shipment Type	
CMK	Single (Limited to the motor side)	BC/M	Keyway Coupling	P.681 ~ P.682
		BL/BR/BM	Keyway Belt Pulley	
SKY	Double	BC/M	Keyway Coupling	
		BL/BR/BM	Keyway Belt Pulley	
SKN	Double	BC/M	Without Coupling (Please purchase and install by yourself)	
		BL/BR/BM	Without Belt Pulley (Please purchase and install by yourself)	

2D CAD 3D CAD • Download at www.toyorobot.com •

BC Motor Exposed (Sensor on the left sdie)

Unit : mm

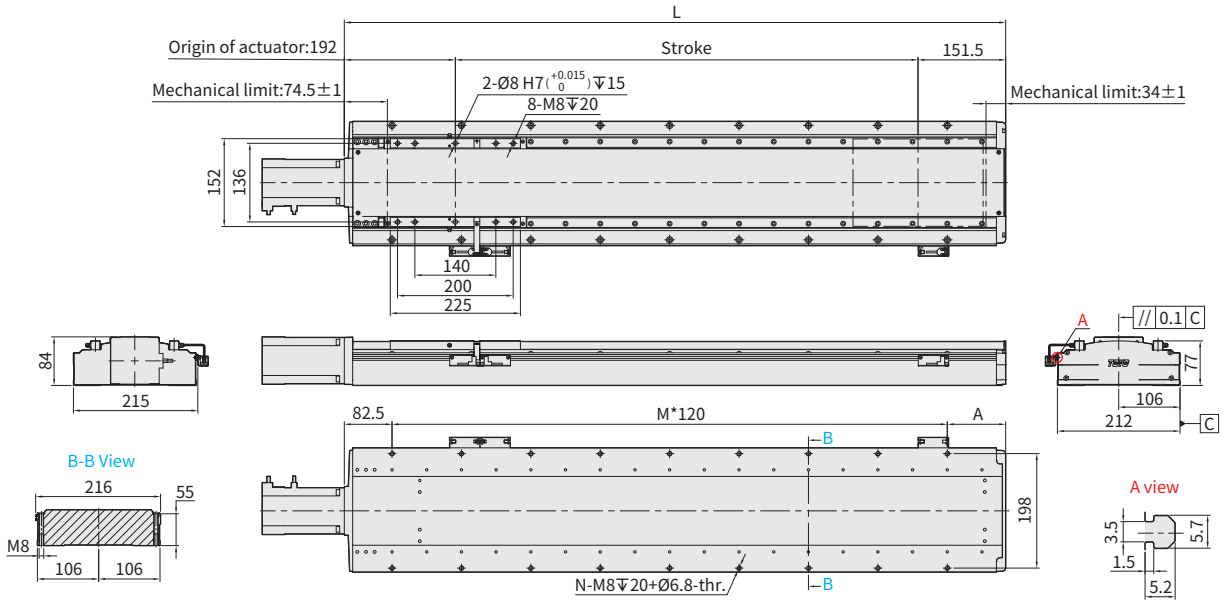

BC Motor Exposed (Sensor on the right side)

Unit : mm

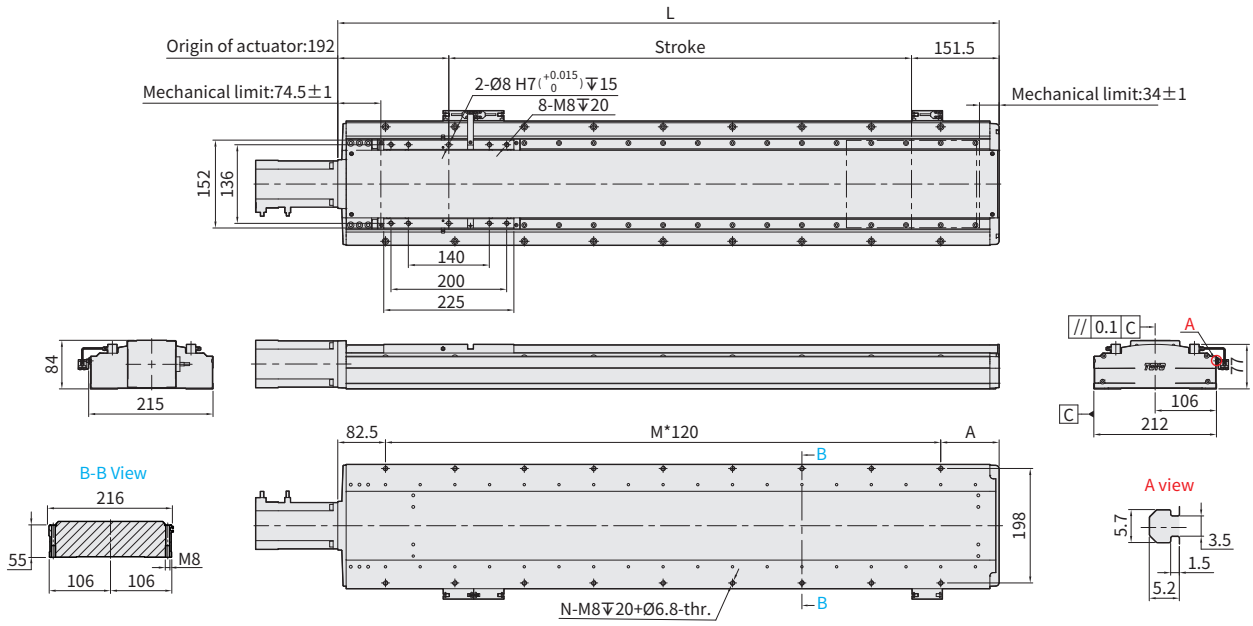

Stroke		50	100	150	200	250	300	350	400	450	500	550	600	650	700	750	800	850	900	950	1000	1050	1100	1150	1200	1250	1300	1350	1400	1450	1500	1550	1600	1650	1700	1750	1800
Limit Stroke (±1)		60	110	160	210	260	310	360	410	460	510	560	610	660	710	760	810	860	910	960	1010	1060	1110	1160	1210	1260	1310	1360	1410	1460	1510	1560	1610	1660	1710	1760	1810
L		393.5	443.5	493.5	543.5	593.5	643.5	693.5	743.5	793.5	843.5	893.5	943.5	993.5	1043.5	1093.5	1143.5	1193.5	1243.5	1293.5	1343.5	1393.5	1443.5	1493.5	1543.5	1593.5	1643.5	1693.5	1743.5	1793.5	1843.5	1893.5	1943.5	1993.5	2043.5	2093.5	2143.5
A		71	121	51	101	31	81	131	61	111	41	91	21	71	121	51	101	31	81	131	61	111	41	91	21	71	121	51	101	31	81	131	61	111	41	91	21
M		2	2	3	3	4	4	5	5	5	6	6	7	7	7	8	8	9	9	10	10	10	11	11	12	12	12	13	13	14	14	15	15	15	16	16	17
N		6	6	8	8	10	10	12	12	12	14	14	16	16	16	18	18	20	20	22	22	22	24	24	26	26	26	28	28	30	30	32	32	32	34	34	36
KG		11.99	12.92	13.86	14.79	15.73	16.66	17.6	18.53	19.46	20.4	21.33	22.27	23.2	24.14	25.07	26.01	26.94	27.88	28.81	29.75	30.68	31.62	32.55	33.49	34.42	35.35	36.29	37.22	38.16	39.09	40.03	40.96	41.89	42.83	43.76	44.7
Linear Speed mm/s	Lead 5	300														275	250	233	208	192	175	167	150	142	133	125	117	108	100	92		83	75		67			
	Lead 10	600														550	500	467	417	383	350	333	300	283	267	250	233	217	200	183		167	150		133			
	Lead 25	1500														1375	1250	1167	1042	958	875	833	750	708	667	625	583	542	500	458		417	375		333			

免費服務專線：台灣 Toll-Free Number Taiwan 0800-800-893

2D CAD 3D CAD • Download at www.toyorobot.com •

BL Motor Left Side (Sensor on the left sdie)

Unit : mm

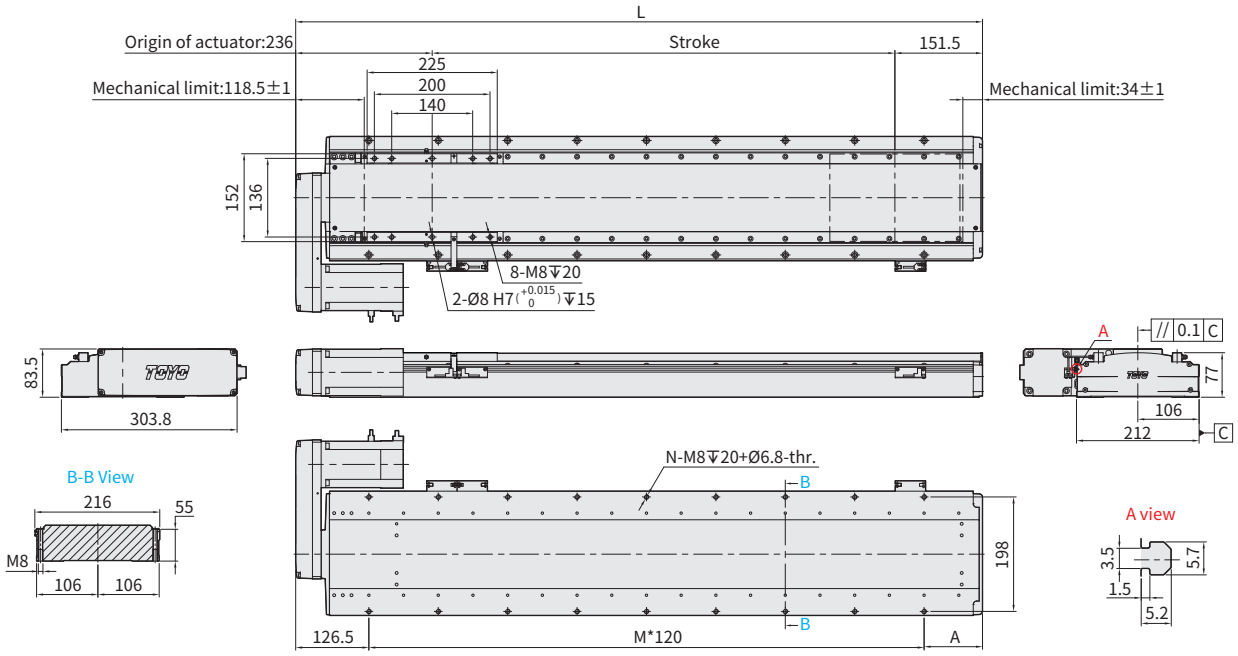

BL Motor Left Side (Sensor on the right side)

Unit : mm

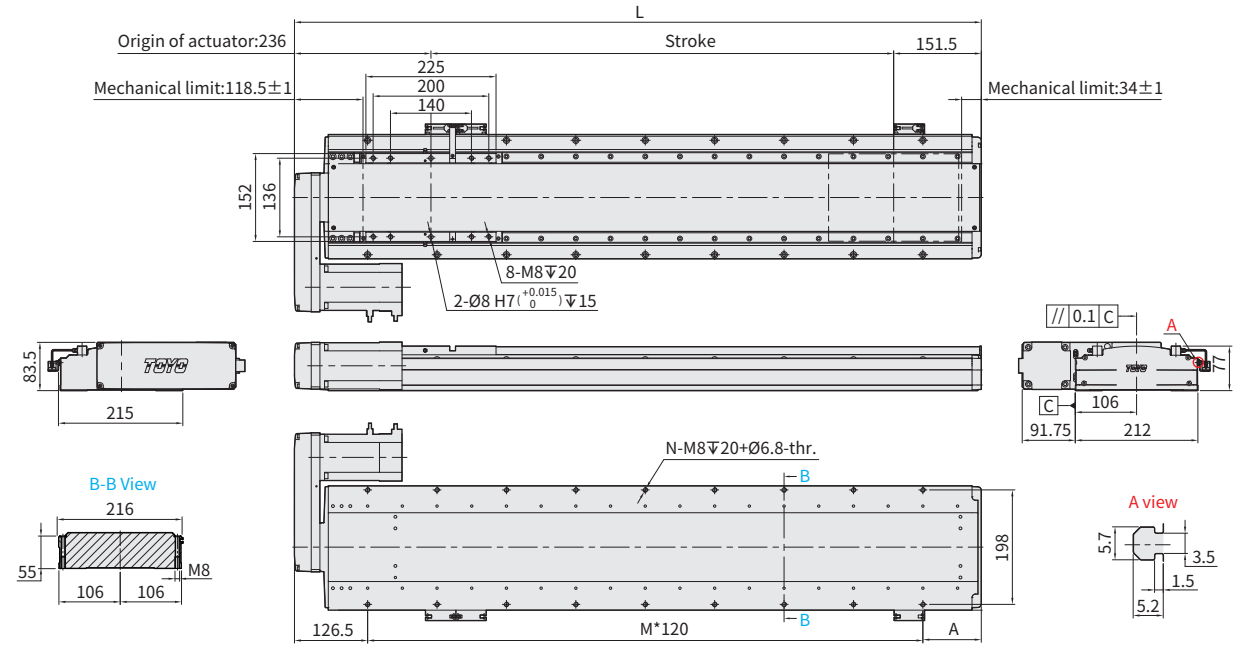

Stroke		50	100	150	200	250	300	350	400	450	500	550	600	650	700	750	800	850	900	950	1000	1050	1100	1150	1200	1250	1300	1350	1400	1450	1500	1550	1600	1650	1700	1750	1800
Limit Stroke (±1)		60	110	160	210	260	310	360	410	460	510	560	610	660	710	760	810	860	910	960	1010	1060	1110	1160	1210	1260	1310	1360	1410	1460	1510	1560	1610	1660	1710	1760	1810
L		437.5	487.5	537.5	587.5	637.5	687.5	737.5	787.5	837.5	887.5	937.5	987.5	1037.5	1087.5	1137.5	1187.5	1237.5	1287.5	1337.5	1387.5	1437.5	1487.5	1537.5	1587.5	1637.5	1687.5	1737.5	1787.5	1837.5	1887.5	1937.5	1987.5	2037.5	2087.5	2137.5	2187.5
A		71	121	51	101	31	81	131	61	111	41	91	21	71	121	51	101	31	81	131	61	111	41	91	21	71	121	51	101	31	81	131	61	111	41	91	21
M		2	2	3	3	4	4	5	5	5	6	6	7	7	7	8	8	9	9	10	10	10	11	11	12	12	12	13	13	14	14	15	15	15	16	16	17
N		6	6	8	8	10	10	12	12	12	14	14	16	16	16	18	18	20	20	22	22	22	24	24	26	26	26	28	28	30	30	32	32	32	34	34	36
KG		13.07	14	14.94	15.87	16.81	17.74	18.68	19.61	20.54	21.48	22.41	23.35	24.28	25.21	26.15	27.08	28.02	28.95	29.89	30.82	31.75	32.69	33.62	34.56	35.49	36.42	37.36	38.29	39.23	40.16	41.1	42.03	42.97	43.9	44.84	45.77
Linear Speed mm/s	Lead 5	300														275	250	233	208	192	175	167	150	142	133	125	117	108	100	92		83	75		67		
	Lead 10	600														550	500	467	417	383	350	333	300	283	267	250	233	217	200	183		167	150		133		
	Lead 25	1500														1375	1250	1167	1042	958	875	833	750	708	667	625	583	542	500	458		417	375		333		

2D CAD 3D CAD • Download at www.toyorobot.com •

BR Motor Right Side (Sensor on the left sdie)

Unit : mm

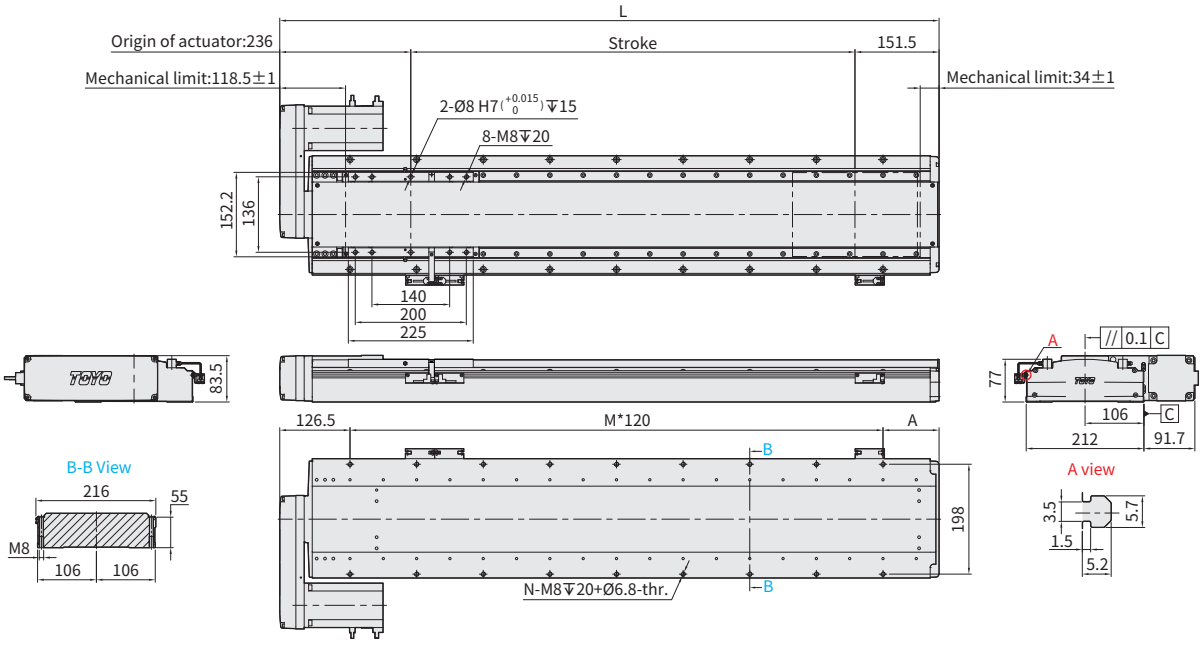

BR Motor Right Side (Sensor on the right side)

Unit : mm

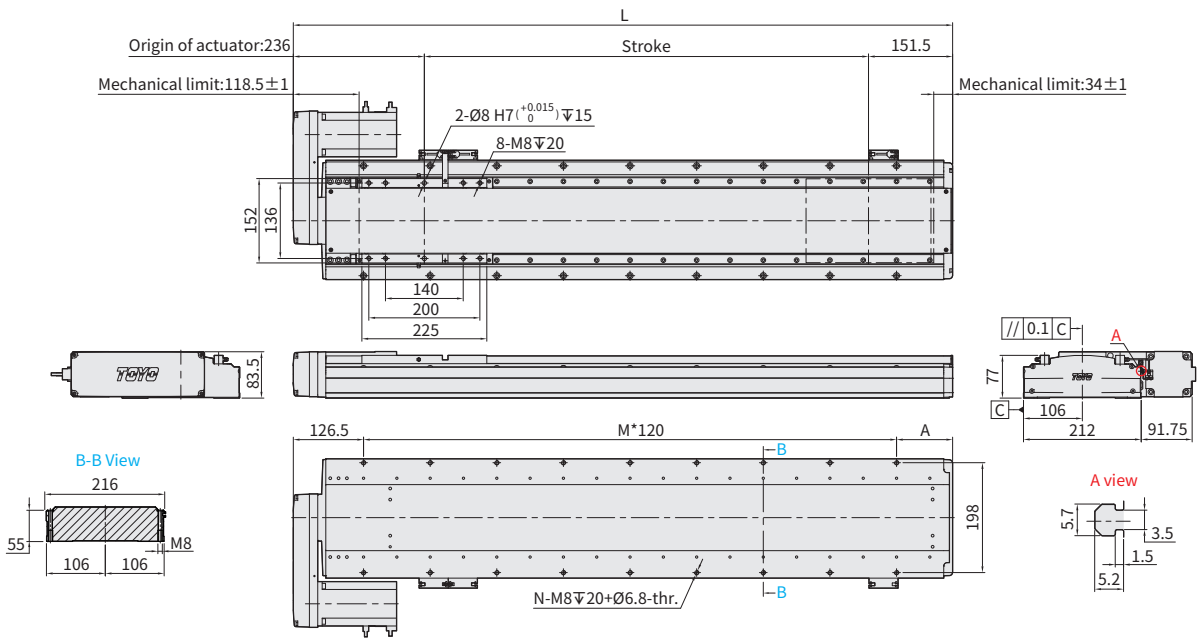

Stroke		50	100	150	200	250	300	350	400	450	500	550	600	650	700	750	800	850	900	950	1000	1050	1100	1150	1200	1250	1300	1350	1400	1450	1500	1550	1600	1650	1700	1750	1800
Limit Stroke (±1)		60	110	160	210	260	310	360	410	460	510	560	610	660	710	760	810	860	910	960	1010	1060	1110	1160	1210	1260	1310	1360	1410	1460	1510	1560	1610	1660	1710	1760	1810
L		437.5	487.5	537.5	587.5	637.5	687.5	737.5	787.5	837.5	887.5	937.5	987.5	1037.5	1087.5	1137.5	1187.5	1237.5	1287.5	1337.5	1387.5	1437.5	1487.5	1537.5	1587.5	1637.5	1687.5	1737.5	1787.5	1837.5	1887.5	1937.5	1987.5	2037.5	2087.5	2137.5	2187.5
A		71	121	51	101	31	81	131	61	111	41	91	21	71	121	51	101	31	81	131	61	111	41	91	21	71	121	51	101	31	81	131	61	111	41	91	21
M		2	2	3	3	4	4	5	5	5	6	6	7	7	7	8	8	9	9	10	10	10	11	11	12	12	12	13	13	14	14	15	15	15	15	16	16	17
N		6	6	8	8	10	10	12	12	12	14	14	16	16	16	18	18	20	20	22	22	22	24	24	26	26	26	28	28	30	30	32	32	32	34	34	36
KG		13.07	14	14.94	15.87	16.81	17.74	18.68	19.61	20.54	21.48	22.41	23.35	24.28	25.21	26.15	27.08	28.02	28.95	29.89	30.82	31.75	32.69	33.62	34.56	35.49	36.42	37.36	38.29	39.23	40.16	41.1	42.03	42.97	43.9	44.84	45.77
Linear Speed mm/s	Lead 5	300														275	250	233	208	192	175	167	150	142	133	125	117	108	100	92		83	75		67			
	Lead 10	600														550	500	467	417	383	350	333	300	283	267	250	233	217	200	183		167	150		133			
	Lead 25	1500														1375	1250	1167	1042	958	875	833	750	708	667	625	583	542	500	458		417	375		333			

BM Motor Bottom Side (Sensor on the left sdie)

Unit : mm

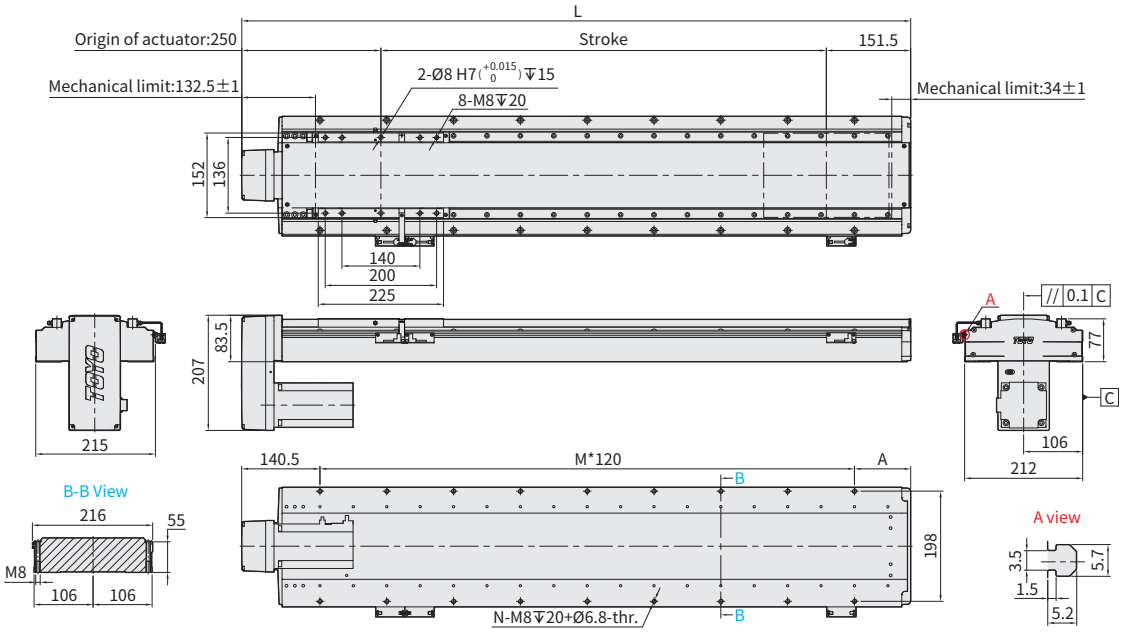

BM Motor Bottom Side (Sensor on the right side)

Unit : mm

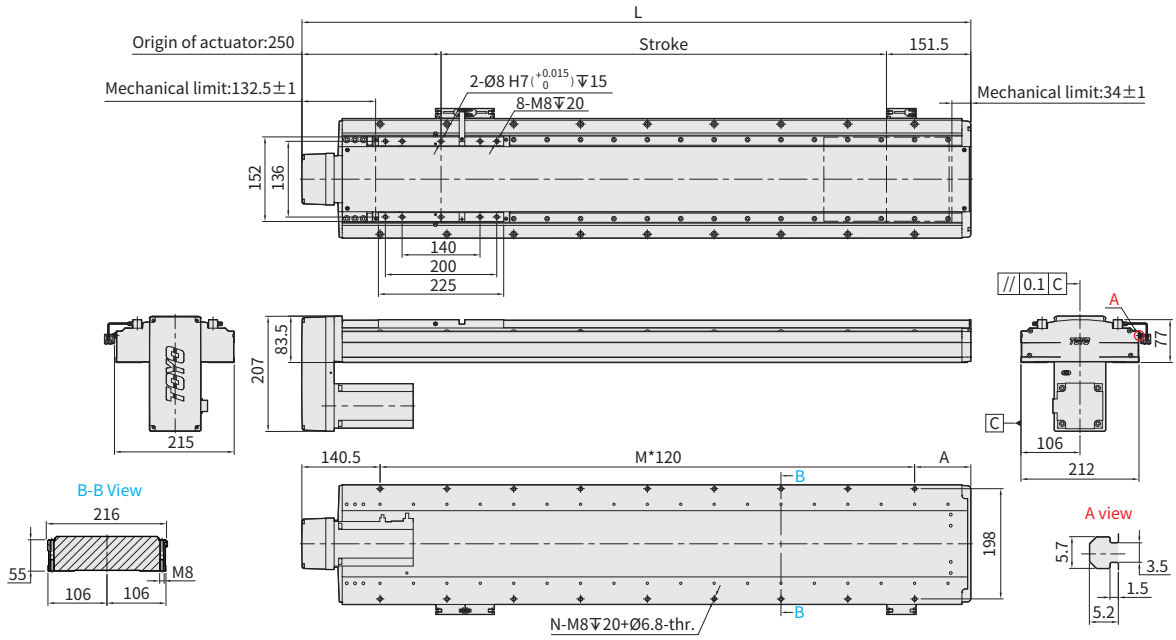

Stroke		50	100	150	200	250	300	350	400	450	500	550	600	650	700	750	800	850	900	950	1000	1050	1100	1150	1200	1250	1300	1350	1400	1450	1500	1550	1600	1650	1700	1750	1800
Limit Stroke (±1)		60	110	160	210	260	310	360	410	460	510	560	610	660	710	760	810	860	910	960	1010	1060	1110	1160	1210	1260	1310	1360	1410	1460	1510	1560	1610	1660	1710	1760	1810
L		451.5	501.5	551.5	601.5	651.5	701.5	751.5	801.5	851.5	901.5	951.5	1001.5	1051.5	1101.5	1151.5	1201.5	1251.5	1301.5	1351.5	1401.5	1451.5	1501.5	1551.5	1601.5	1651.5	1701.5	1751.5	1801.5	1851.5	1901.5	1951.5	2001.5	2051.5	2101.5	2151.5	2201.5
A		71	121	51	101	31	81	131	61	111	41	91	21	71	121	51	101	31	81	131	61	111	41	91	21	71	121	51	101	31	81	131	61	111	41	91	21
M		2	2	3	3	4	4	5	5	5	6	6	7	7	7	8	8	9	9	10	10	10	11	11	12	12	12	13	13	14	14	15	15	15	16	16	17
N		6	6	8	8	10	10	12	12	12	14	14	16	16	16	18	18	20	20	22	22	22	24	24	26	26	26	28	28	30	30	32	32	32	34	34	36
KG		13.07	14	14.94	15.87	16.81	17.74	18.68	19.61	20.54	21.48	22.41	23.35	24.28	25.21	26.15	27.08	28.02	28.95	29.89	30.82	31.75	32.69	33.62	34.56	35.49	36.42	37.36	38.29	39.23	40.16	41.1	42.03	42.97	43.9	44.84	45.77
Linear Speed mm/s	Lead 5	300														275	250	233	208	192	175	167	150	142	133	125	117	108	100	92		83	75		67		
	Lead 10	600														550	500	467	417	383	350	333	300	283	267	250	233	217	200	183		167	150		133		
	Lead 25	1500														1375	1250	1167	1042	958	875	833	750	708	667	625	583	542	500	458		417	375		333		

ETH2-30 1-axis

Ball Screw Drive

Max. stroke	Max. Speed	Motor Output	Ball Screw	Linear Guide
2100mm	1280mm/s	1500W	ø32mm	23X19.2-2pcs

Ordering Method

ETH2-30 - L10 - 500 - BC - T150B - C3N5L - [Refer to the right page.] - 0001

Model | Options | Customization Order No.

Ball Screw Lead

10	10mm
20	20mm
32	32mm

Stroke

50-2100mm

50 mm Pitch

Motor Position

BC	Motor Exposed
BL	Motor Left Side
BR	Motor Right Side
BM	Motor Bottom Side

Motor Brand、Power Output

M	Mitsubishi	40	-	B
P	Panasonic	75	-	
T	Delta	150	1500W	

*If No Brake,No Description.

Home Sensor

Out Side	
C	Motor Side
D	Opposite Motor Side
No Sensor	
E	No Sensor

Limit Sensor

Out Side	
3	1 Pc
4	2 Pcs
6	3 Pcs
7	4 Pcs
8	5 Pcs
9	6 Pcs
No Sensor	
5	No Sensor

*When the stroke is 50mm, Home + limit sensors is 2 maximum (only C3/D3/E3/E4/E5 can be selected)

Output type & Cable length

N5	NPN+5M Cable
P2	PNP+2M Cable
P5	PNP+5M Cable
-	NPN+2M Cable

Sensor location

L	Left side
R	Right side

Specification

Performance	Repeatability		mm	±0.005		
	Lead		mm	10	20	32
	Maximum Rotating speed		rpm	2400	2400	2400
	Maximum linear speed ※1		mm/s	400	800	1280
	Maximum Payload	Horizontal (No regenerative resistor)	kg	250	200	20
		Horizontal (External 200W regenerative resistor)	kg	-	-	105
		Vertical (No regenerative resistor)	kg	35	20	10
		Vertical (External 200W regenerative resistor)	kg	48	25	12
	Rated Thrust		N	3824	1912	1195
	Stroke (increments)		mm	50-2100mm/(50 increments)		
	Maximum acceleration		G	0.20	0.41	0.65
	Ball screw	Basic dynamic load rating Ca	N	47137	18708	18031
		Basic static load rating Coa	N	119760	53778	52277
	Linear Guide	Dynamic horizontal (100km)	N	85033		
		Static Horizontal	N	177552		
	Fixed bearing	Basic dynamic load rating Cr	N	25017		
		Static load rating Cor	N	18940		
Parts	AC Servo Motor Output		W	1500		
	Ball Screw Ø		mm	C7Ø32		
	High Rigidity Linear Guide		mm	W23XH19.2		
	Coupling		mm	24X22		
	Home Sensor	Outside		T64N2(NPN)		

※1 During in a long stroke, it causes ballscrew deflection, the speed must reduce. (Please refer to the linear velocity from the data sheet below the dimension graph.)

Allowable Overhang

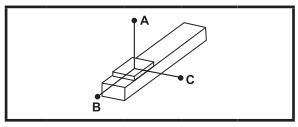

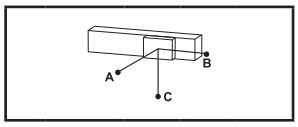

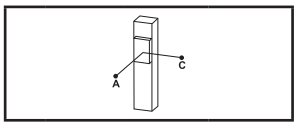

(Unit : mm)

Horizontal Installation		A	B	C
Lead 10	100kg	5800	457	650
	200kg	2730	196	279
	250kg	2110	144	205
Lead 20	50kg	4005	829	1075
	100kg	1922	382	497
	200kg	876	159	208
Lead 32	20kg	4190	1655	1790
	50kg	1617	625	679
	105kg	716	262	289

(Unit : mm)

Wall Installation		A	B	C
Lead 10	100kg	650	457	5800
	200kg	279	196	2730
	250kg	205	144	2110
Lead 20	50kg	1075	829	4005
	100kg	497	382	1922
	200kg	208	159	876
Lead 32	20kg	1790	1655	4190
	50kg	679	625	1617
	105kg	289	262	716

(Unit : mm)

Vertical Installation		A	C
Lead 10	25kg	2009	2009
	35kg	1435	1435
	48kg	1046	1046
Lead 20	20kg	2052	2052
	25kg	1642	1642
	-	-	-
Lead 32	10kg	2919	2919
	12kg	2433	2433
	-	-	-

Static Loading Moment

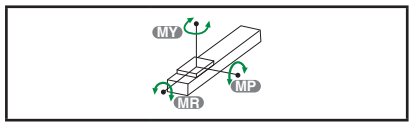

(Unit : N.m)

MY	2371
MP	2371
MR	2874

* The data represented by the moment table is the center of gravity of the load.The length of the overhang is allowed in a single direction.
*Operation life is 10,000km when the product is using under the specified conditions.
*Data information is not for ceiling-mount inverse use.
Contact us for the details if you want to apply ceiling-mount inverse usage.
*The life and torque are calculated by setting the motor acceleration and deceleration for 0.2 seconds.

Options

P – MM – CMK

Standard PIN hole

Code	Instructions	Refer to
P	Standard PIN hole	P.677

Selectable Cable Leading Direction

Code	Instructions	Refer to
MW	Upper side	P.679 ~ P.680
MM	Bottom side	
ML	Left side	
MR	Right side	

Additional keyway for motor drive parts

Code	Instructions			Refer to
	Keyway Groove	Motor Position	Shipment Type	
CMK	Single (Limited to the motor side)	BC/M	Keyway Coupling	P.681 ~ P.682
		BL/BR/BM	Keyway Belt Pulley	
SKY	Double	BC/M	Keyway Coupling	
		BL/BR/BM	Keyway Belt Pulley	
SKN	Double	BC/M	Without Coupling (Please purchase and install by yourself)	
		BL/BR/BM	Without Belt Pulley (Please purchase and install by yourself)	

2D CAD 3D CAD • Download at www.toyorobot.com •

BC Motor Exposed (Sensor on the left sdie)

Unit : mm

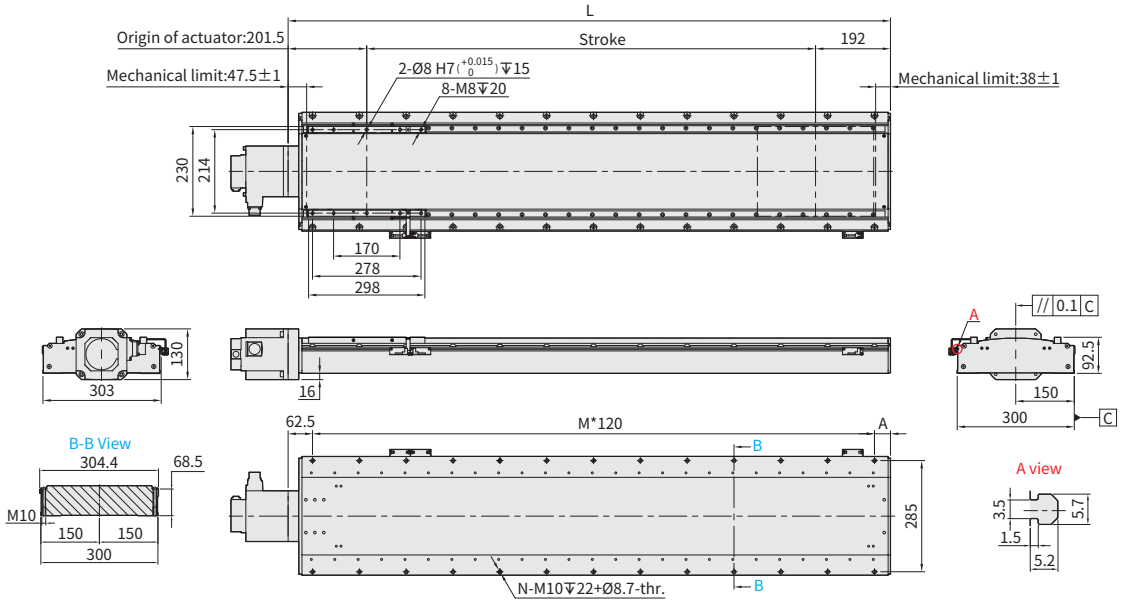

BC Motor Exposed (Sensor on the right side)

Unit : mm

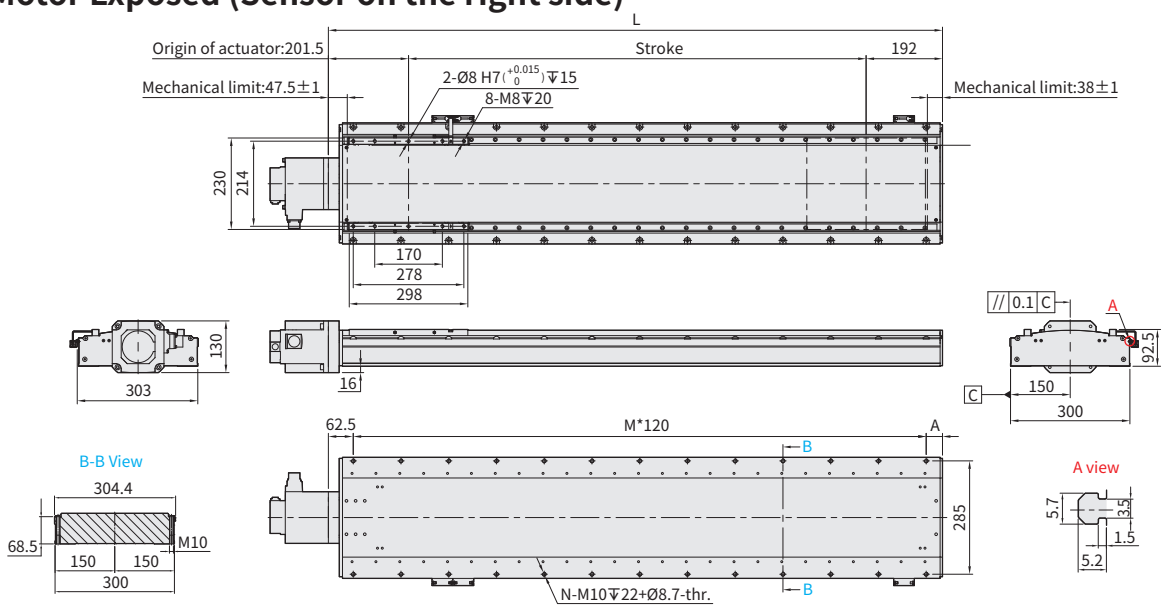

Stroke		50	100	150	200	250	300	350	400	450	500	550	600	650	700	750	800	850	900	950	1000	1050	1100	1150	1200	1250	1300
Limit Stroke (±1)		60	110	160	210	260	310	360	410	460	510	560	610	660	710	760	810	860	910	960	1010	1060	1110	1160	1210	1260	1310
L		443.5	493.5	543.5	593.5	643.5	693.5	743.5	793.5	843.5	893.5	943.5	993.5	1043.5	1093.5	1143.5	1193.5	1243.5	1293.5	1343.5	1393.5	1443.5	1493.5	1543.5	1593.5	1643.5	1693.5
A		21	71	121	51	101	31	81	131	61	111	41	91	21	71	121	51	101	31	81	131	61	111	41	91	21	71
M		3	3	3	4	4	5	5	5	6	6	7	7	8	8	8	9	9	10	10	10	11	11	12	12	13	13
N		8	8	8	10	10	12	12	12	14	14	16	16	18	18	18	20	20	22	22	22	24	24	26	26	28	28
KG		23.24	24.76	26.32	27.86	29.41	30.96	32.51	34.06	35.61	37.15	38.71	40.25	41.81	43.35	44.91	46.45	47.99	49.55	51.09	52.65	54.19	55.74	57.29	58.84	60.39	61.94
Linear Speed mm/s	Lead 10	400																									
	Lead 20	800																									
	Lead 32	1280																									

Stroke		1350	1400	1450	1500	1550	1600	1650	1700	1750	1800	1850	1900	1950	2000	2050	2100
Limit Stroke (±1)		1360	1410	1460	1510	1560	1610	1660	1710	1760	1810	1860	1910	1960	2010	2060	2110
L		1743.5	1793.5	1843.5	1893.5	1943.5	1993.5	2043.5	2093.5	2143.5	2193.5	2243.5	2293.5	2343.5	2393.5	2443.5	2493.5
A		121	51	101	31	81	131	61	111	41	91	21	71	121	51	101	31
M		13	14	14	15	15	15	16	16	17	17	18	18	18	19	19	20
N		28	30	30	32	32	32	34	34	36	36	38	38	38	40	40	42
KG		63.49	65.04	66.58	68.14	69.68	71.24	72.78	74.32	75.88	77.42	78.98	80.52	82.08	83.62	85.17	86.72
Linear Speed mm/s	Lead 10	383	367	333	317	300	283	267	250		233	217	200	183			167
	Lead 20	767	733	667	633	600	567	533	500		467	433	400	367			333
	Lead 32	1227	1173	1067	1013	960	907	853	800		747	693	640	587			533

2D CAD 3D CAD • Download at www.toyorobot.com •

BL Motor Left Side (Sensor on the left sdie)

Unit : mm

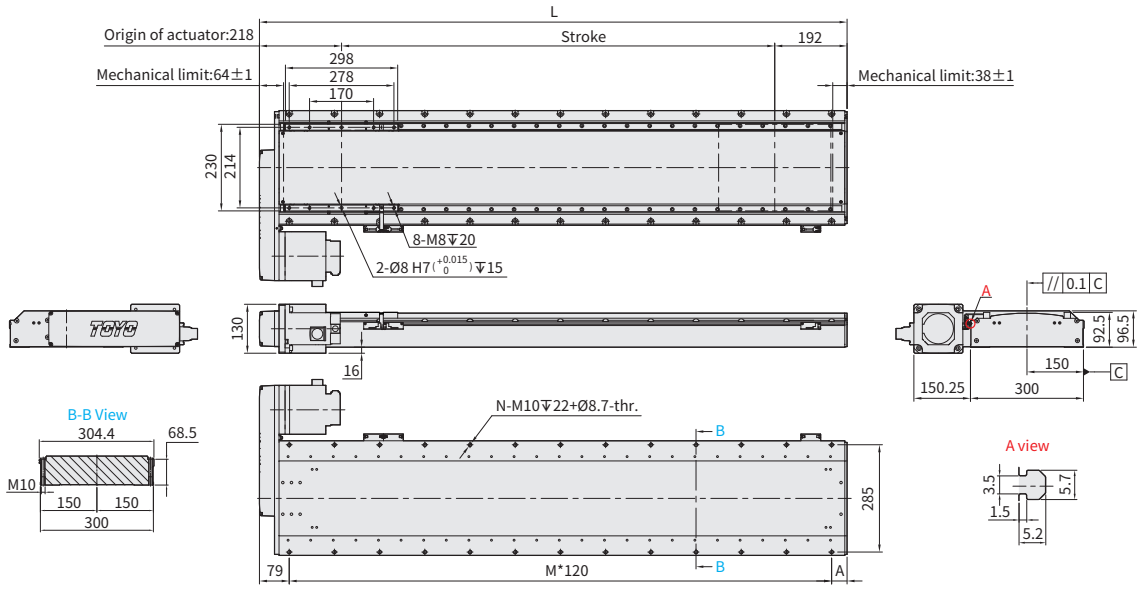

BL Motor Left Side (Sensor on the right side)

Unit : mm

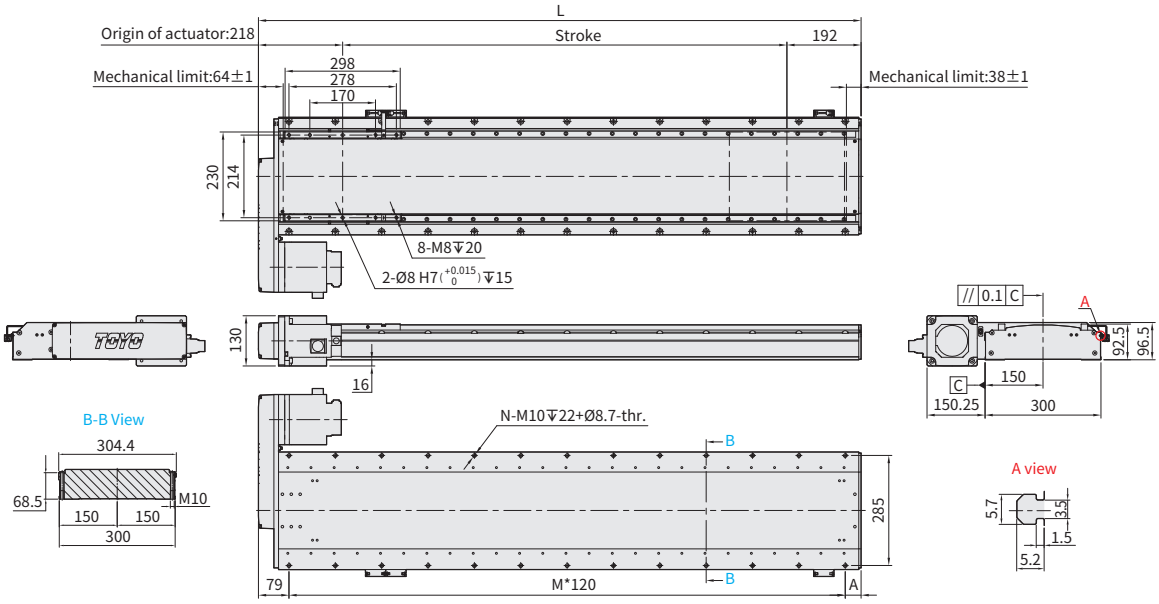

Stroke		50	100	150	200	250	300	350	400	450	500	550	600	650	700	750	800	850	900	950	1000	1050	1100	1150	1200	1250	1300
Limit Stroke (±1)		60	110	160	210	260	310	360	410	460	510	560	610	660	710	760	810	860	910	960	1010	1060	1110	1160	1210	1260	1310
L		460	510	560	610	660	710	760	810	860	910	960	1010	1060	1110	1160	1210	1260	1310	1360	1410	1460	1510	1560	1610	1660	1710
A		21	71	121	51	101	31	81	131	61	111	41	91	21	71	121	51	101	31	81	131	61	111	41	91	21	71
M		3	3	3	4	4	5	5	5	6	6	7	7	8	8	8	9	9	10	10	10	11	11	12	12	13	13
N		8	8	8	10	10	12	12	12	14	14	16	16	18	18	18	20	20	22	22	22	24	24	26	26	28	28
KG		25.56	27.09	28.65	30.19	31.73	33.29	34.83	36.39	37.93	39.48	41.03	42.58	44.13	45.68	47.23	48.78	50.32	51.88	53.42	54.98	56.52	58.06	59.62	61.16	62.72	64.26
Linear Speed mm/s	Lead 10	400																									
	Lead 20	800																									
	Lead 32	1280																									

Stroke		1350	1400	1450	1500	1550	1600	1650	1700	1750	1800	1850	1900	1950	2000	2050	2100
Limit Stroke (±1)		1360	1410	1460	1510	1560	1610	1660	1710	1760	1810	1860	1910	1960	2010	2060	2110
L		1760	1810	1860	1910	1960	2010	2060	2110	2160	2210	2260	2310	2360	2410	2460	2510
A		121	51	101	31	81	131	61	111	41	91	21	71	121	51	101	31
M		13	14	14	15	15	15	16	16	17	17	18	18	18	19	19	20
N		28	30	30	32	32	32	34	34	36	36	38	38	38	40	40	42
KG		65.82	67.36	68.91	70.46	72.01	73.56	75.11	76.65	78.21	79.75	81.31	82.85	84.41	85.95	87.49	89.05
Linear Speed mm/s	Lead 10	383	367	333	317	300	283	267	250	233	217	200	183	167			
	Lead 20	767	733	667	633	600	567	533	500	467	433	400	367	333			
	Lead 32	1227	1173	1067	1013	960	907	853	800	747	693	640	587	533			

2D CAD 3D CAD

• Download at www.toyorobot.com •

BR Motor Right Side (Sensor on the left sdie)

Unit : mm

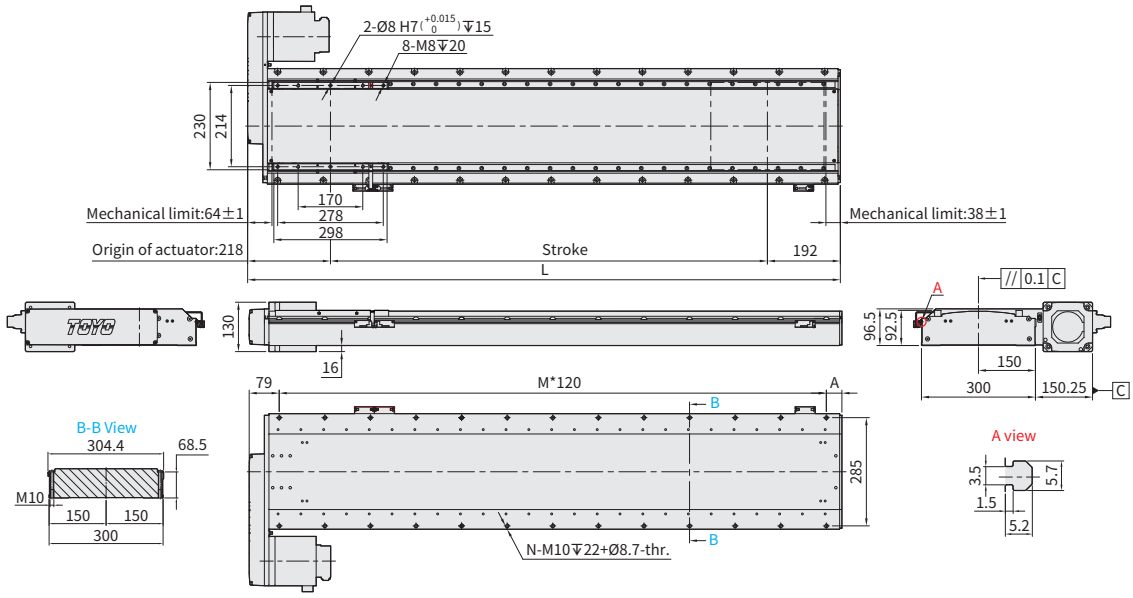

BR Motor Right Side (Sensor on the right side)

Unit : mm

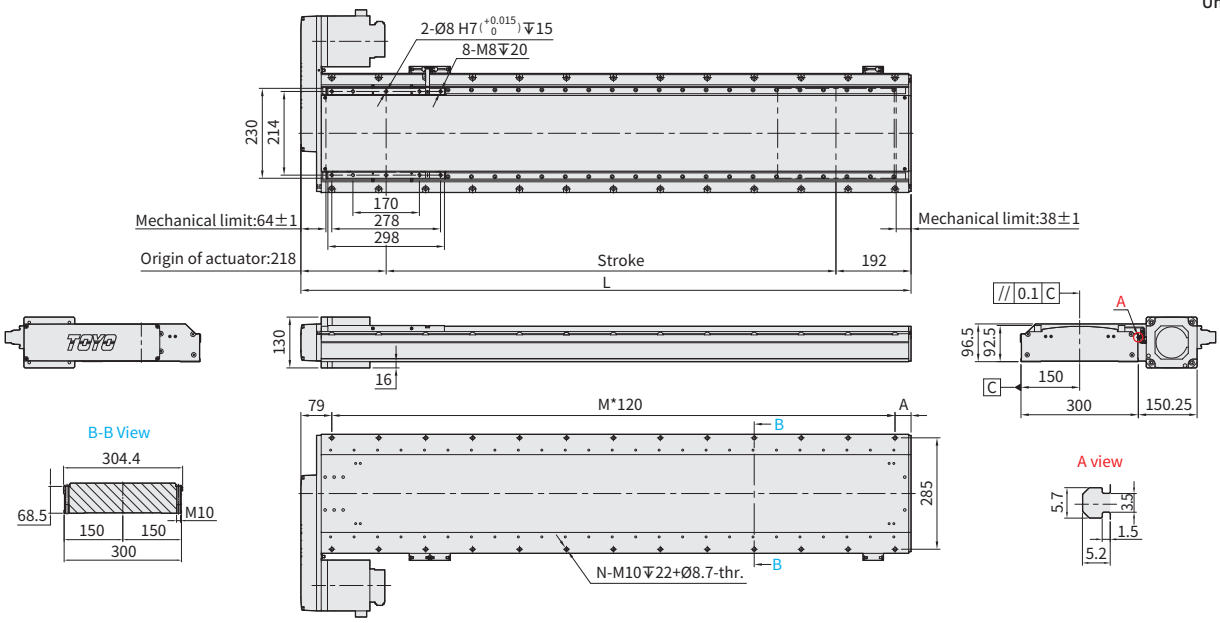

Stroke		50	100	150	200	250	300	350	400	450	500	550	600	650	700	750	800	850	900	950	1000	1050	1100	1150	1200	1250	1300
Limit Stroke (±1)		60	110	160	210	260	310	360	410	460	510	560	610	660	710	760	810	860	910	960	1010	1060	1110	1160	1210	1260	1310
L		460	510	560	610	660	710	760	810	860	910	960	1010	1060	1110	1160	1210	1260	1310	1360	1410	1460	1510	1560	1610	1660	1710
A		21	71	121	51	101	31	81	131	61	111	41	91	21	71	121	51	101	31	81	131	61	111	41	91	21	71
M		3	3	3	4	4	5	5	5	6	6	7	7	8	8	8	9	9	10	10	10	11	11	12	12	13	13
N		8	8	8	10	10	12	12	12	14	14	16	16	18	18	18	20	20	22	22	22	24	24	26	26	28	28
KG		25.56	27.09	28.65	30.19	31.73	33.29	34.83	36.39	37.93	39.48	41.03	42.58	44.13	45.68	47.23	48.78	50.32	51.88	53.42	54.98	56.52	58.06	59.62	61.16	62.72	64.26
Linear Speed mm/s	Lead 10	400																									
	Lead 20	800																									
	Lead 32	1280																									

Stroke		1350	1400	1450	1500	1550	1600	1650	1700	1750	1800	1850	1900	1950	2000	2050	2100
Limit Stroke (±1)		1360	1410	1460	1510	1560	1610	1660	1710	1760	1810	1860	1910	1960	2010	2060	2110
L		1760	1810	1860	1910	1960	2010	2060	2110	2160	2210	2260	2310	2360	2410	2460	2510
A		121	51	101	31	81	131	61	111	41	91	21	71	121	51	101	31
M		13	14	14	15	15	15	16	16	17	17	18	18	18	19	19	20
N		28	30	30	32	32	32	34	34	36	36	38	38	38	40	40	42
KG		65.82	67.36	68.91	70.46	72.01	73.56	75.11	76.65	78.21	79.75	81.31	82.85	84.41	85.95	87.49	89.05
Linear Speed mm/s	Lead 10	383	367	333	317	300	283	267	250		233	217		200	183		167
	Lead 20	767	733	667	633	600	567	533	500		467	433		400	367		333
	Lead 32	1227	1173	1067	1013	960	907	853	800		747	693		640	587		533

BM Motor Bottom Side (Sensor on the left sdie)

Unit : mm

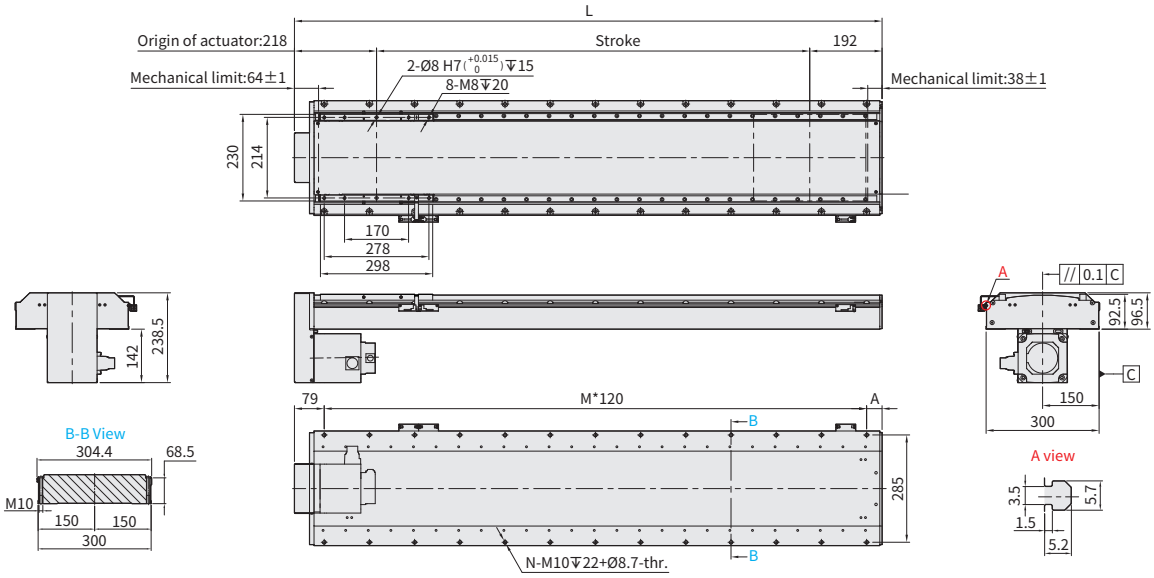

BM Motor Bottom Side (Sensor on the right side)

單位 Unit : mm

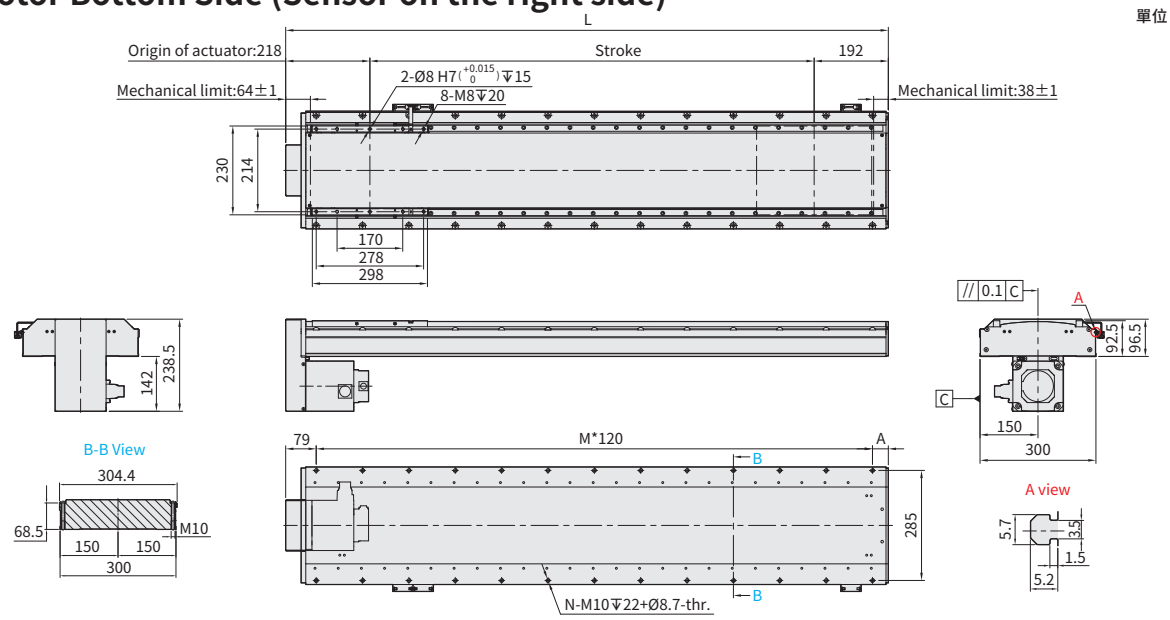

Stroke		50	100	150	200	250	300	350	400	450	500	550	600	650	700	750	800	850	900	950	1000	1050	1100	1150	1200	1250	1300
Limit Stroke (±1)		60	110	160	210	260	310	360	410	460	510	560	610	660	710	760	810	860	910	960	1010	1060	1110	1160	1210	1260	1310
L		460	510	560	610	660	710	760	810	860	910	960	1010	1060	1110	1160	1210	1260	1310	1360	1410	1460	1510	1560	1610	1660	1710
A		21	71	121	51	101	31	81	131	61	111	41	91	21	71	121	51	101	31	81	131	61	111	41	91	21	71
M		3	3	3	4	4	5	5	5	6	6	7	7	8	8	8	9	9	10	10	10	11	11	12	12	13	13
N		8	8	8	10	10	12	12	12	14	14	16	16	18	18	18	20	20	22	22	22	24	24	26	26	28	28
KG		24.47	26	27.56	29.1	30.65	32.2	33.75	35.3	36.85	38.39	39.95	41.49	43.05	44.59	46.15	47.69	49.23	50.79	52.33	53.89	55.43	56.97	58.53	60.07	61.63	63.17
Linear Speed mm/s	Lead 10	400																									
	Lead 20	800																									
	Lead 32	1280																									

Stroke		1350	1400	1450	1500	1550	1600	1650	1700	1750	1800	1850	1900	1950	2000	2050	2100
Limit Stroke (±1)		1360	1410	1460	1510	1560	1610	1660	1710	1760	1810	1860	1910	1960	2010	2060	2110
L		1760	1810	1860	1910	1960	2010	2060	2110	2160	2210	2260	2310	2360	2410	2460	2510
A		121	51	101	31	81	131	61	111	41	91	21	71	121	51	101	31
M		13	14	14	15	15	15	16	16	17	17	18	18	18	19	19	20
N		28	30	30	32	32	32	34	34	36	36	38	38	38	40	40	42
KG		64.73	66.27	67.82	69.37	70.92	72.47	74.02	75.56	77.12	78.66	80.22	81.76	83.32	84.86	86.4	87.96
Linear Speed mm/s	Lead 10	383	367	333	317	300	283	267	250	233	217	200	183	167			
	Lead 20	767	733	667	633	600	567	533	500	467	433	400	367	333			
	Lead 32	1227	1173	1067	1013	960	907	853	800	747	693	640	587	533			

ETH2-30 1-axis

Ball Screw Drive

Max. stroke	Max. Speed	Motor Output	Ball Screw	Linear Guide
2100mm	640mm/s	750W	ø32mm	23X19.2-2pcs

* Differ from different gear ratio.

Ordering Method

ETH2-30 - L10 - 500 - BC - T75B - C3N5L - 03 - [Refer to the right page.] - 0001

Model | Options | Customization Order No.

Stroke

50-2100mm
50 mm Pitch

Ball Screw Lead

10	10mm
20	20mm
32	32mm

Motor Position

BC	Motor Exposed
BL	Motor Left Side
BR	Motor Right Side
BM	Motor Bottom Side

Motor Brand、Power Output

M	Mitsubishi	10	-	B
P	Panasonic	20	-	
Y	Yaskawa	40	-	
T	Delta	75	750W	

*If No Brake,No Description.

Home Sensor

Out Side	
C	Motor Side
D	Opposite Motor Side
No Sensor	
E	No Sensor

Sensor location

L	Left side
R	Right side

Limit Sensor

Out Side	
3	1 Pc
4	2 Pcs
6	3 Pcs
7	4 Pcs
8	5 Pcs
9	6 Pcs
No Sensor	
5	No Sensor

*When the stroke is 50mm, Home + limit sensors is 2 maximum (only C3/D3/E3/E4/E5 can be selected)

Slide

3	3:1
5	5:1

Output type & Cable length

N5	NPN+5M Cable
P2	PNP+2M Cable
P5	PNP+5M Cable
-	NPN+2M Cable

Specification

Performance	Repeatability		mm	±0.005					
	Lead		mm	10		20		32	
	Reduce Ratio			3:1	5:1	3:1	5:1	3:1	5:1
	Maximum Rotating speed		rpm	3600		3600		3600	
	Maximum linear speed ※1		mm/s	200	120	400	240	640	384
	Maximum Payload	Horizontal	kg	400	400	300	300	180	180
		Vertical (No regenerative resistor)	kg	110	155	55	75	20	38
		Vertical (External 200W regenerative resistor)	kg	130	200	65	110	38	60
	Rated Thrust		N	3829	6382	1915	3191	1197	1994
	Stroke (increments)		mm	50-2100mm/(50 increments)					
	Maximum acceleration		G	0.10	0.06	0.20	0.12	0.33	0.20
	Ball screw	Basic dynamic load rating Ca	N	47137		18708		18031	
		Basic static load rating Coa	N	119760		53778		52277	
	Linear Guide	Dynamic horizontal (100km)	N	85033					
		Static Horizontal	N	177552					
	Fixed bearing	Basic dynamic load rating Cr	N	25017					
		Static load rating Cor	N	18940					
Parts	AC Servo Motor Output		W	750					
	Ball Screw Ø		mm	C7Ø32					
	High Rigidity Linear Guide		mm	W23XH19.2					
	Coupling		mm	22X22					
	Home Sensor	Outside		T64N2(NPN)					

※1 During in a long stroke, it causes ballscrew deflection, the speed must reduce. (Please refer to the linear velocity from the data sheet below the dimension graph.)

Allowable Overhang

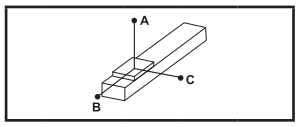

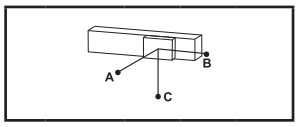

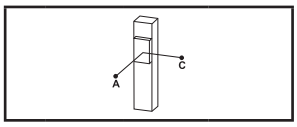

(Unit : mm)

Horizontal Installation		A	B	C
Lead 10	200kg	8155	233	339
	300kg	5180	134	195
	400kg	3659	84	122
Lead 20	100kg	5800	457	650
	200kg	2730	196	279
	300kg	1691	109	155
Lead 32	80kg	3518	528	716
	130kg	2086	300	408
	180kg	1447	199	270

(Unit : mm)

Wall Installation		A	B	C
Lead 10	200kg	339	233	8155
	300kg	195	134	5180
	400kg	122	84	3659
Lead 20	100kg	650	457	5800
	200kg	279	196	2730
	300kg	155	109	1691
Lead 32	80kg	716	528	3518
	130kg	408	300	2086
	180kg	270	199	1447

(Unit : mm)

Vertical Installation		A	C
Lead 10	110kg	532	532
	155kg	377	377
	200kg	292	292
Lead 20	55kg	913	913
	75kg	669	669
	110kg	456	456
Lead 32	20kg	2223	2223
	38kg	1170	1170
	60kg	741	741

Static Loading Moment

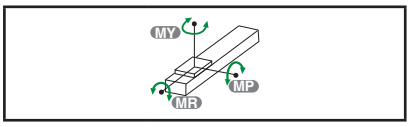

(Unit : N.m)

MY	2371
MP	2371
MR	2874

* The data represented by the moment table is the center of gravity of the load.The length of the overhang is allowed in a single direction.
*Operation life is 10,000km when the product is using under the specified conditions.
*Data information is not for ceiling-mount inverse use.
Contact us for the details if you want to apply ceiling-mount inverse usage.
*The life and torque are calculated by setting the motor acceleration and deceleration for 0.2 seconds.

Options

P - MM - CMK

Standard PIN hole

Code	Instructions	Refer to
P	Standard PIN hole	P.677

Selectable Cable Leading Direction

Code	Instructions	Refer to
MW	Upper side	P.679 ~ P.680
MM	Bottom side	
ML	Left side	
MR	Right side	

Additional keyway for motor drive parts

Code	Instructions			Refer to
	Keyway Groove	Motor Position	Shipment Type	
CMK	Single (Limited to the motor side)	BC/M	Keyway Coupling	P.681 ~ P.682
		BL/BR/BM	Keyway Belt Pulley	
SKY	Double	BC/M	Keyway Coupling	
		BL/BR/BM	Keyway Belt Pulley	
SKN	Double	BC/M	Without Coupling (Please purchase and install by yourself)	
		BL/BR/BM	Without Belt Pulley (Please purchase and install by yourself)	

2D CAD 3D CAD • Download at www.toyorobot.com •

BC Motor Exposed (Sensor on the left sdie)

Unit : mm

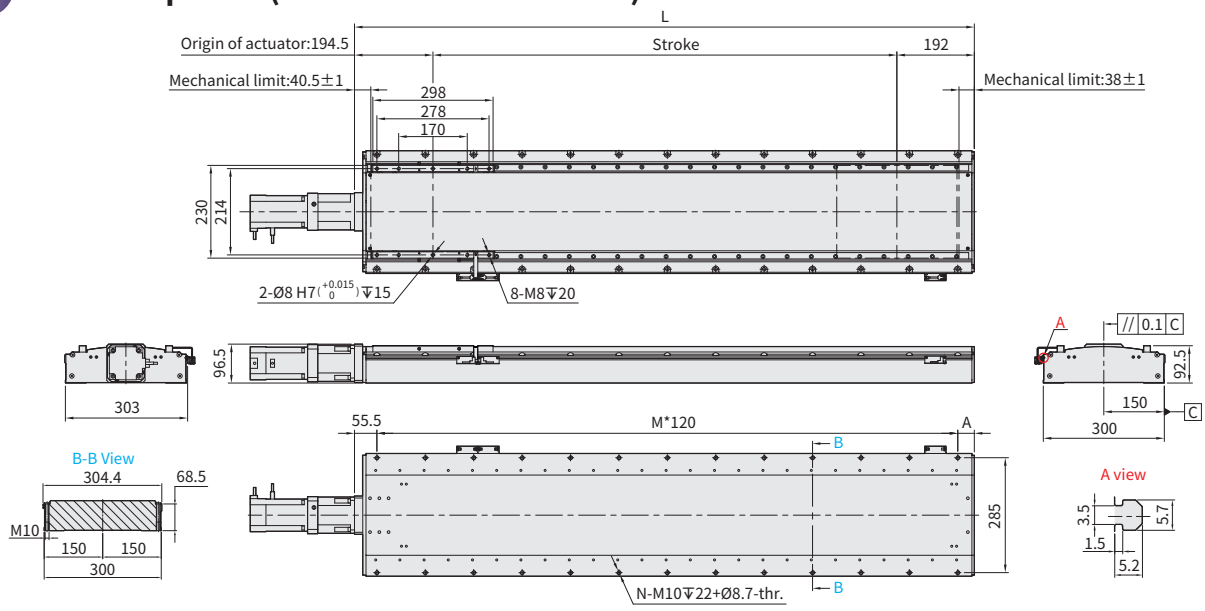

BC Motor Exposed (Sensor on the right side)

Unit : mm

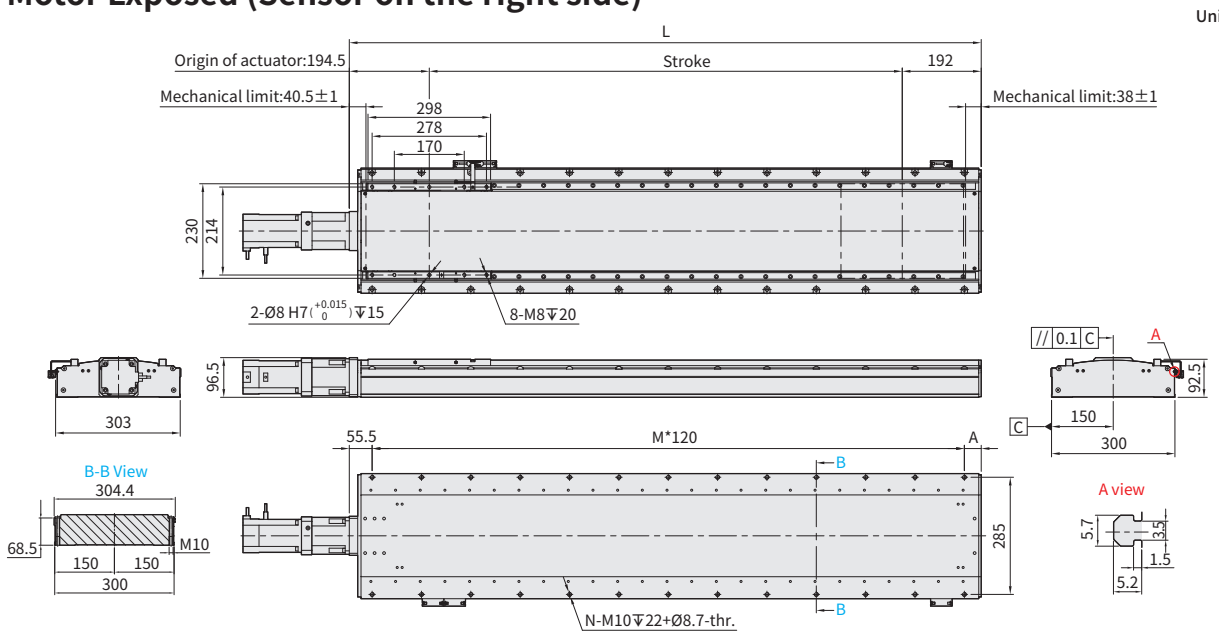

Stroke		50	100	150	200	250	300	350	400	450	500	550	600	650	700	750	800	850	900	950	1000	1050	1100	1150	1200	1250	1300	1350
Limit Stroke (±1)		60	110	160	210	260	310	360	410	460	510	560	610	660	710	760	810	860	910	960	1010	1060	1110	1160	1210	1260	1310	1360
L		436.5	486.5	536.5	586.5	636.5	686.5	736.5	786.5	836.5	886.5	936.5	986.5	1036.5	1086.5	1136.5	1186.5	1236.5	1286.5	1336.5	1386.5	1436.5	1486.5	1536.5	1586.5	1636.5	1686.5	1736.5
A		21	71	121	51	101	31	81	131	61	111	41	91	21	71	121	51	101	31	81	131	61	111	41	91	21	71	121
M		3	3	3	4	4	5	5	5	6	6	7	7	8	8	8	9	9	10	10	10	11	11	12	12	13	13	13
N		8	8	8	10	10	12	12	12	14	14	16	16	18	18	18	20	20	22	22	22	24	24	26	26	28	28	28
KG		26.34	27.87	29.43	30.97	32.51	34.07	35.61	37.17	38.71	40.26	41.81	43.36	44.91	46.46	48.01	49.56	51.1	52.66	54.2	55.76	57.3	58.84	60.4	61.94	63.5	65.04	66.6
Linear Speed mm/s	Lead 10	200 Reduce Ratio 3:1 / 120 Reduce Ratio 5:1																										
	Lead 20	400 Reduce Ratio 3:1 / 240 Reduce Ratio 5:1																										
	Lead 32	640 Reduce Ratio 3:1 / 384 Reduce Ratio 5:1																										

Stroke		1400	1450	1500	1550	1600	1650	1700	1750	1800	1850	1900	1950	2000	2050	2100
Limit Stroke (±1)		1410	1460	1510	1560	1610	1660	1710	1760	1810	1860	1910	1960	2010	2060	2110
L		1786.5	1836.5	1886.5	1936.5	1986.5	2036.5	2086.5	2136.5	2186.5	2236.5	2286.5	2336.5	2386.5	2436.5	2486.5
A		51	101	31	81	131	61	111	41	91	21	71	121	51	101	31
M		14	14	15	15	15	16	16	17	17	18	18	18	19	19	20
N		30	30	32	32	32	34	34	36	36	38	38	38	40	40	42
KG		68.14	69.69	71.24	72.79	74.34	75.89	77.43	78.99	80.53	82.09	83.63	85.19	86.73	88.27	89.83
Linear Speed mm/s	Lead 10	200 Reduce Ratio 3:1 / 120 Reduce Ratio 5:1												183 Reduce Ratio 3:1 / 120 Reduce Ratio 5:1		167 Reduce Ratio 3:1 / 120 Reduce Ratio 5:1
	Lead 20	400 Reduce Ratio 3:1 / 240 Reduce Ratio 5:1												367 Reduce Ratio 3:1 / 240 Reduce Ratio 5:1		333 Reduce Ratio 3:1 / 240 Reduce Ratio 5:1
	Lead 32	640 Reduce Ratio 3:1 / 384 Reduce Ratio 5:1												587 Reduce Ratio 3:1 / 384 Reduce Ratio 5:1		533 Reduce Ratio 3:1 / 120 Reduce Ratio 5:1

BL Motor Left Side (Sensor on the left sdie)

Unit : mm

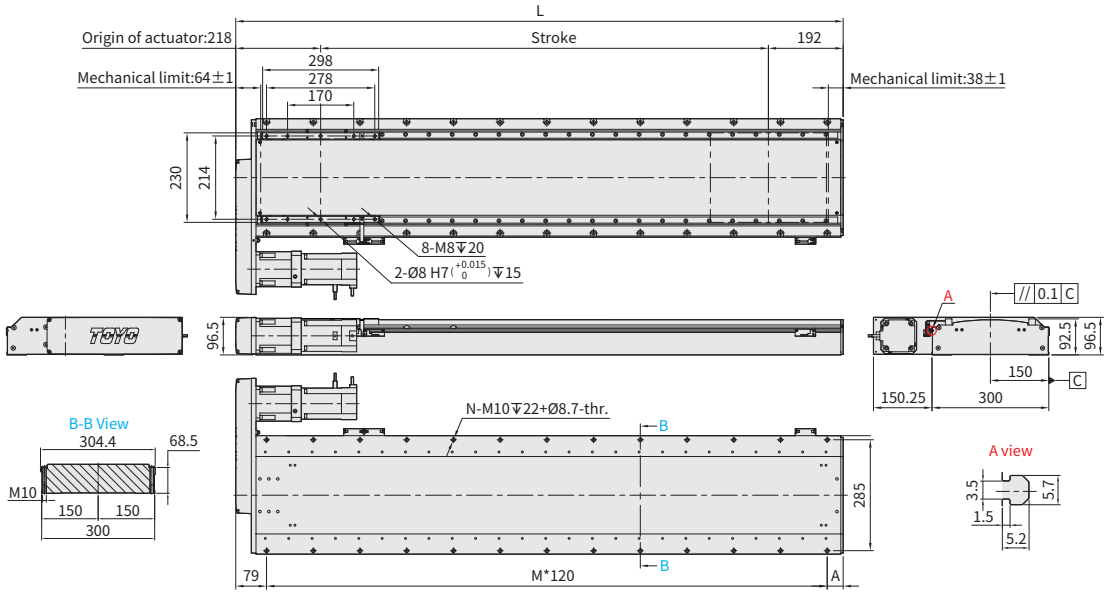

BL Motor Left Side (Sensor on the right side)

Unit : mm

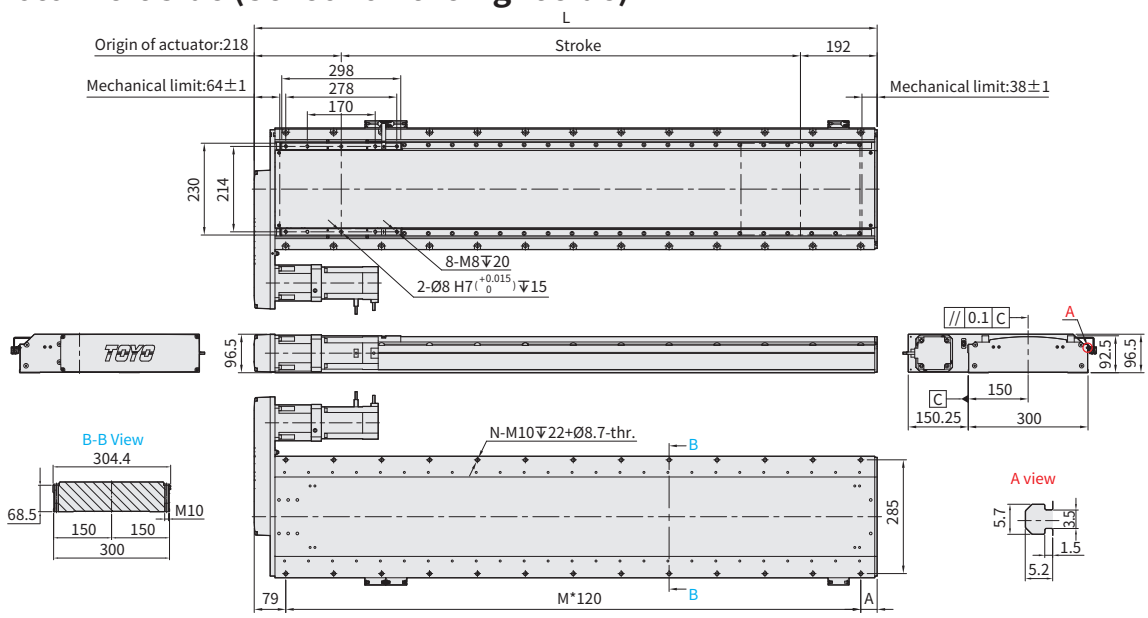

Stroke		50	100	150	200	250	300	350	400	450	500	550	600	650	700	750	800	850	900	950	1000	1050	1100	1150	1200	1250	1300	1350
Limit Stroke (±1)		60	110	160	210	260	310	360	410	460	510	560	610	660	710	760	810	860	910	960	1010	1060	1110	1160	1210	1260	1310	1360
L		460	510	560	610	660	710	760	810	860	910	960	1010	1060	1110	1160	1210	1260	1310	1360	1410	1460	1510	1560	1610	1660	1710	1760
A		21	71	121	51	101	31	81	131	61	111	41	91	21	71	121	51	101	31	81	131	61	111	41	91	21	71	121
M		3	3	3	4	4	5	5	5	6	6	7	7	8	8	8	9	9	10	10	10	11	11	12	12	13	13	13
N		8	8	8	10	10	12	12	12	14	14	16	16	18	18	18	20	20	22	22	22	24	24	26	26	28	28	28
KG		28.78	30.31	31.86	33.41	34.95	36.51	38.05	39.61	41.15	42.69	44.24	45.79	47.35	48.89	50.45	51.99	53.54	55.09	56.64	58.19	59.74	61.28	62.84	64.38	65.94	67.48	69.04
Linear Speed mm/s	Lead 10	200 Reduce Ratio 3:1 / 120 Reduce Ratio 5:1																										
	Lead 20	400 Reduce Ratio 3:1 / 240 Reduce Ratio 5:1																										
	Lead 32	640 Reduce Ratio 3:1 / 384 Reduce Ratio 5:1																										

Stroke		1400	1450	1500	1550	1600	1650	1700	1750	1800	1850	1900	1950	2000	2050	2100
Limit Stroke (±1)		1410	1460	1510	1560	1610	1660	1710	1760	1810	1860	1910	1960	2010	2060	2110
L		1810	1860	1910	1960	2010	2060	2110	2160	2210	2260	2310	2360	2410	2460	2510
A		51	101	31	81	131	61	111	41	91	21	71	121	51	101	31
M		14	14	15	15	15	16	16	17	17	18	18	18	19	19	20
N		30	30	32	32	32	34	34	36	36	38	38	38	40	40	42
KG		70.58	72.12	73.68	75.22	76.78	78.32	79.87	81.42	82.97	84.52	86.07	87.61	89.16	90.71	92.27
Linear Speed mm/s	Lead 10	200 Reduce Ratio 3:1 / 120 Reduce Ratio 5:1												183 Reduce Ratio 3:1 / 120 Reduce Ratio 5:1		167 Reduce Ratio 3:1 / 120 Reduce Ratio 5:1
	Lead 20	400 Reduce Ratio 3:1 / 240 Reduce Ratio 5:1												367 Reduce Ratio 3:1 / 240 Reduce Ratio 5:1		333 Reduce Ratio 3:1 / 240 Reduce Ratio 5:1
	Lead 32	640 Reduce Ratio 3:1 / 384 Reduce Ratio 5:1												587 Reduce Ratio 3:1 / 384 Reduce Ratio 5:1		533 Reduce Ratio 3:1 / 120 Reduce Ratio 5:1

2D CAD 3D CAD • Download at www.toyorobot.com •

BR Motor Right Side (Sensor on the left sdie)

Unit : mm

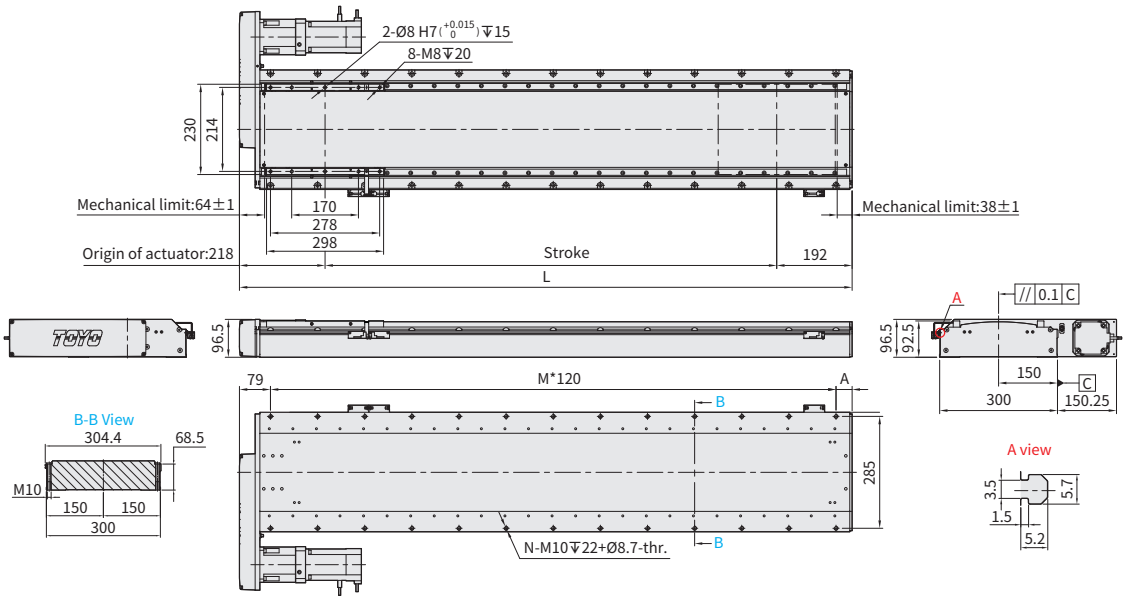

BR Motor Right Side (Sensor on the right side)

Unit : mm

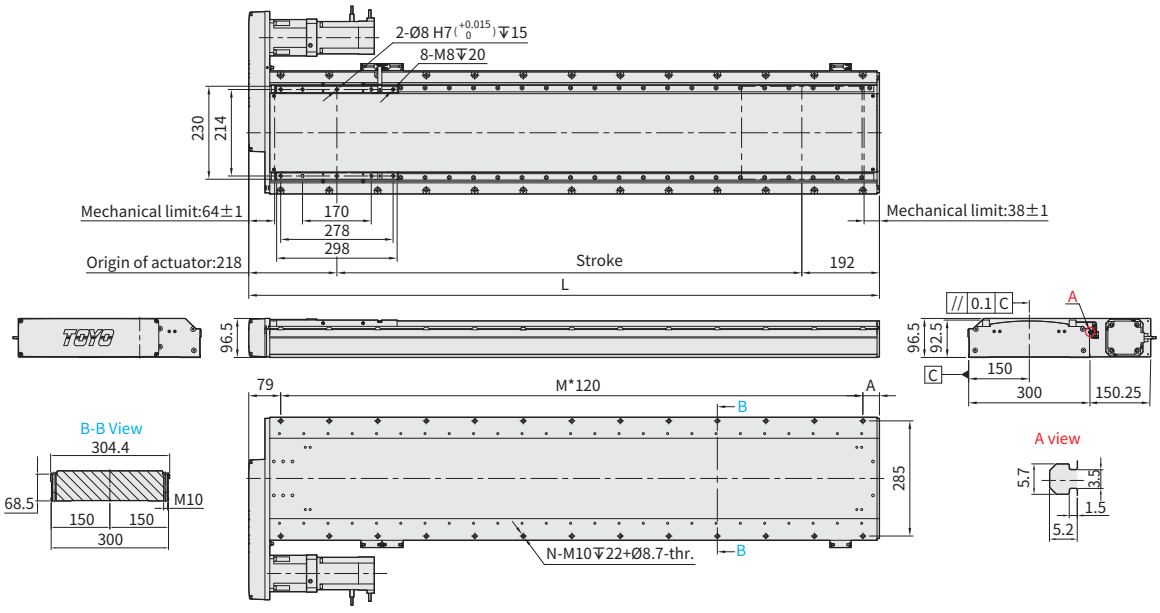

Stroke		50	100	150	200	250	300	350	400	450	500	550	600	650	700	750	800	850	900	950	1000	1050	1100	1150	1200	1250	1300	1350
Limit Stroke (±1)		60	110	160	210	260	310	360	410	460	510	560	610	660	710	760	810	860	910	960	1010	1060	1110	1160	1210	1260	1310	1360
L		460	510	560	610	660	710	760	810	860	910	960	1010	1060	1110	1160	1210	1260	1310	1360	1410	1460	1510	1560	1610	1660	1710	1760
A		21	71	121	51	101	31	81	131	61	111	41	91	21	71	121	51	101	31	81	131	61	111	41	91	21	71	121
M		3	3	3	4	4	5	5	5	6	6	7	7	8	8	8	9	9	10	10	10	11	11	12	12	13	13	13
N		8	8	8	10	10	12	12	12	14	14	16	16	18	18	18	20	20	22	22	22	24	24	26	26	28	28	28
KG		28.78	30.31	31.86	33.41	34.95	36.51	38.05	39.61	41.15	42.69	44.24	45.79	47.35	48.89	50.45	51.99	53.54	55.09	56.64	58.19	59.74	61.28	62.84	64.38	65.94	67.48	69.04
Linear Speed mm/s	Lead 10	200 Reduce Ratio 3:1 / 120 Reduce Ratio 5:1																										
	Lead 20	400 Reduce Ratio 3:1 / 240 Reduce Ratio 5:1																										
	Lead 32	640 Reduce Ratio 3:1 / 384 Reduce Ratio 5:1																										

Stroke		1400	1450	1500	1550	1600	1650	1700	1750	1800	1850	1900	1950	2000	2050	2100
Limit Stroke (±1)		1410	1460	1510	1560	1610	1660	1710	1760	1810	1860	1910	1960	2010	2060	2110
L		1810	1860	1910	1960	2010	2060	2110	2160	2210	2260	2310	2360	2410	2460	2510
A		51	101	31	81	131	61	111	41	91	21	71	121	51	101	31
M		14	14	15	15	15	16	16	17	17	18	18	18	19	19	20
N		30	30	32	32	32	34	34	36	36	38	38	38	40	40	42
KG		70.58	72.12	73.68	75.22	76.78	78.32	79.87	81.42	82.97	84.52	86.07	87.61	89.16	90.71	92.27
Linear Speed mm/s	Lead 10	200 Reduce Ratio 3:1 / 120 Reduce Ratio 5:1												183 Reduce Ratio 3:1 / 120 Reduce Ratio 5:1		167 Reduce Ratio 3:1 / 120 Reduce Ratio 5:1
	Lead 20	400 Reduce Ratio 3:1 / 240 Reduce Ratio 5:1												367 Reduce Ratio 3:1 / 240 Reduce Ratio 5:1		333 Reduce Ratio 3:1 / 240 Reduce Ratio 5:1
	Lead 32	640 Reduce Ratio 3:1 / 384 Reduce Ratio 5:1												587 Reduce Ratio 3:1 / 384 Reduce Ratio 5:1		533 Reduce Ratio 3:1 / 120 Reduce Ratio 5:1

免費服務專線：台灣 Toll-Free Number Taiwan 0800-800-893

2D CAD 3D CAD

• Download at www.toyorobot.com •

BM Motor Bottom Side (Sensor on the left sdie)

Unit : mm

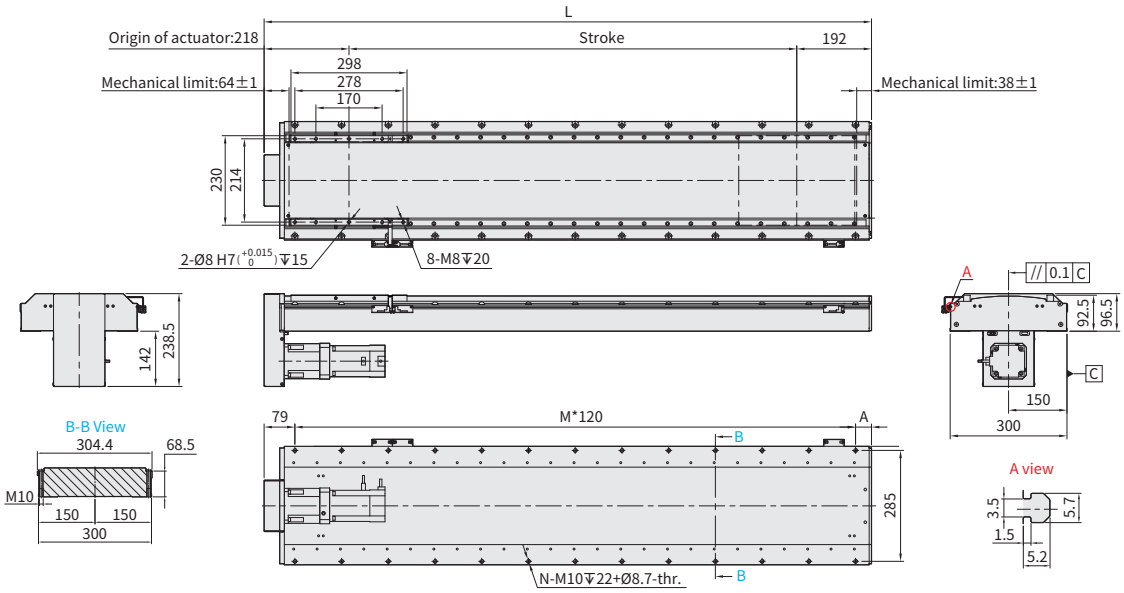

BM Motor Bottom Side (Sensor on the right side)

Unit : mm

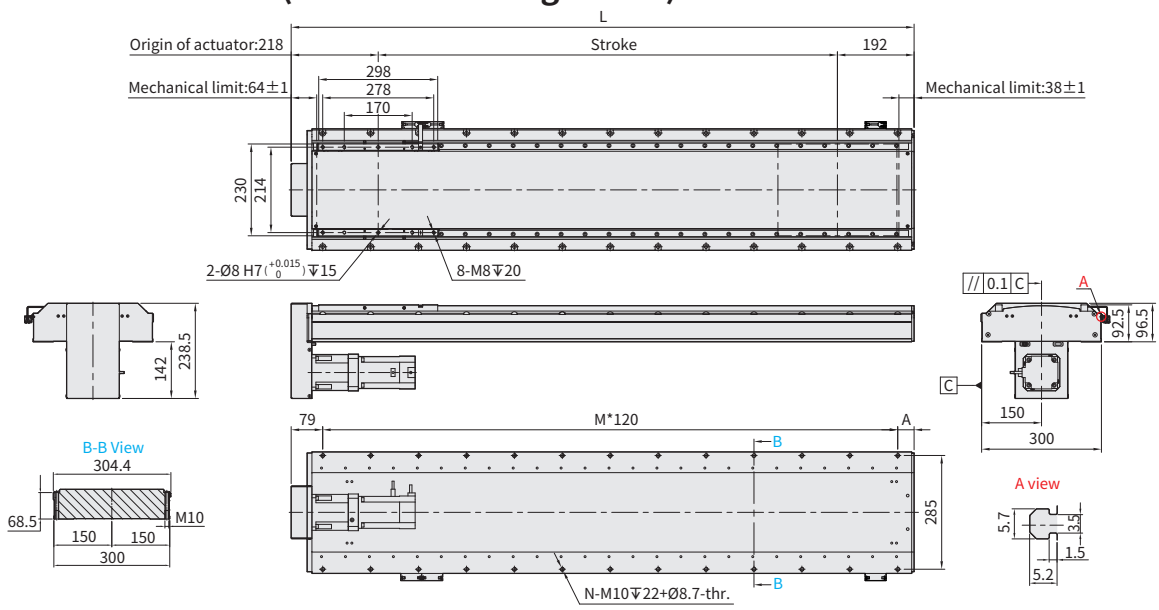

Stroke		50	100	150	200	250	300	350	400	450	500	550	600	650	700	750	800	850	900	950	1000	1050	1100	1150	1200	1250	1300	1350
Limit Stroke (±1)		60	110	160	210	260	310	360	410	460	510	560	610	660	710	760	810	860	910	960	1010	1060	1110	1160	1210	1260	1310	1360
L		460	510	560	610	660	710	760	810	860	910	960	1010	1060	1110	1160	1210	1260	1310	1360	1410	1460	1510	1560	1610	1660	1710	1760
A		21	71	121	51	101	31	81	131	61	111	41	91	21	71	121	51	101	31	81	131	61	111	41	91	21	71	121
M		3	3	3	4	4	5	5	5	6	6	7	7	8	8	8	9	9	10	10	10	11	11	12	12	13	13	13
N		8	8	8	10	10	12	12	12	14	14	16	16	18	18	18	20	20	22	22	22	24	24	26	26	28	28	28
KG		27.71	29.24	30.79	32.34	33.88	35.44	36.98	38.54	40.08	41.62	43.18	44.72	46.28	47.82	49.38	50.92	52.46	54.02	55.56	57.12	58.66	60.21	61.76	63.31	64.86	66.41	67.96
Linear Speed mm/s	Lead 10	200 Reduce Ratio 3:1 / 120 Reduce Ratio 5:1																										
	Lead 20	400 Reduce Ratio 3:1 / 240 Reduce Ratio 5:1																										
	Lead 32	640 Reduce Ratio 3:1 / 384 Reduce Ratio 5:1																										

Stroke		1400	1450	1500	1550	1600	1650	1700	1750	1800	1850	1900	1950	2000	2050	2100
Limit Stroke (±1)		1410	1460	1510	1560	1610	1660	1710	1760	1810	1860	1910	1960	2010	2060	2110
L		1810	1860	1910	1960	2010	2060	2110	2160	2210	2260	2310	2360	2410	2460	2510
A		51	101	31	81	131	61	111	41	91	21	71	121	51	101	31
M		14	14	15	15	15	16	16	17	17	18	18	18	19	19	20
N		30	30	32	32	32	34	34	36	36	38	38	38	40	40	42
KG		69.51	71.05	72.59	74.15	75.71	77.25	78.79	80.35	81.89	83.45	84.99	86.55	88.09	89.64	91.19
Linear Speed mm/s	Lead 10	200 Reduce Ratio 3:1 / 120 Reduce Ratio 5:1												183 Reduce Ratio 3:1 / 120 Reduce Ratio 5:1		167 Reduce Ratio 3:1 / 120 Reduce Ratio 5:1
	Lead 20	400 Reduce Ratio 3:1 / 240 Reduce Ratio 5:1												367 Reduce Ratio 3:1 / 240 Reduce Ratio 5:1		333 Reduce Ratio 3:1 / 240 Reduce Ratio 5:1
	Lead 32	640 Reduce Ratio 3:1 / 384 Reduce Ratio 5:1												587 Reduce Ratio 3:1 / 384 Reduce Ratio 5:1		533 Reduce Ratio 3:1 / 120 Reduce Ratio 5:1

ETH2-14D 1-axis

Ball Screw Drive

Max. stroke	Max. Speed	Motor Output	Ball Screw	Linear Guide
1050mm	1440mm/s	400W	ø14mm	15X12.5-2pcs

Ordering Method

ETH2-14D - L6 - 500 - BC - M40B - C3N5L - [Refer to the right page.] - 0001

Model | Options | Customization Order No.

Stroke

50-1050mm
50 mm Pitch

Sensor location

L	Left side
R	Right side

Ball Screw Lead

6	6mm
12	12mm
24	24mm

Motor Position

BC	Motor Exposed
BL	Motor Left Side
BR	Motor Right Side
BM	Motor Bottom Side

Motor Brand、Power Output

M	Mitsubishi	10	-	B
P	Panasonic	20	-	
Y	Yaskawa	40	400W	
T	Delta	75	-	

*If No Brake,No Description.

Home Sensor

Out Side	
C	Motor Side
D	Opposite Motor Side
No Sensor	
E	No Sensor

Limit Sensor

Out Side	
3	1 Pc
4	2 Pcs
6	3 Pcs
7	4 Pcs
8	5 Pcs
9	6 Pcs
No Sensor	
5	No Sensor

*When the stroke is 50mm, Home + limit sensors is 2 maximum (only C3/D3/E3/E4/E5 can be selected)

Output type & Cable length

N5	NPN+5M Cable
P2	PNP+2M Cable
P5	PNP+5M Cable
-	NPN+2M Cable

Specification

Performance	Repeatability		mm	±0.005					
	Lead		mm	6		12		24	
	Maximum Rotating speed		rpm	3600	3000	3600	3000	3600	3000
	Maximum linear speed ※1		mm/s	360	300	720	600	1440	1200
	Maximum Payload	Horizontal	kg	110	110	88	88	40	50
		Vertical (No regenerative resistor)	kg	29	33	15	16	9	10
		Vertical (External 200W regenerative resistor)	kg	40	40	26	26	20	20
	Rated Thrust		N	1130		565		283	
	Stroke (increments)		mm	50-1050mm/ (50 increments)					
	Maximum acceleration		G	0.18	0.15	0.37	0.31	0.73	0.61
	Ball screw	Basic dynamic load rating Ca	N	7740		5866		3012	
		Basic static load rating Coa	N	14215		10408		5415	
	Linear Guide	Dynamic horizontal (100km)	N	48193					
		Static Horizontal	N	103488					
	Fixed bearing	Basic dynamic load rating Cr	N	8447					
		Static load rating Cor	N	5060					
Parts	AC Servo Motor Output		W	400					
	Ball Screw Ø		mm	C7Ø14					
	High Rigidity Linear Guide		mm	W15XH12.5					
	Coupling		mm	14X10					
	Home Sensor	Outside		T64N(NPN)					

※1 During in a long stroke, it causes ballscrew deflection, the speed must reduce. (Please refer to the linear velocity from the data sheet below the dimension graph.)

Allowable Overhang

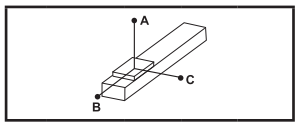

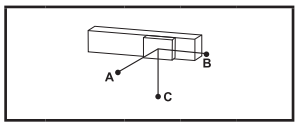

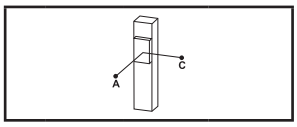

(Unit : mm)

Horizontal Installation		A	B	C
Lead 6	60kg	4780	450	130
	70kg	4010	370	107
	110kg	2310	197	57
Lead 12	30kg	3410	860	242
	60kg	1555	376	106
	88kg	961	222	62
Lead 24	20kg	1356	880	218
	40kg	604	387	96
	50kg	454	288	71

(Unit : mm)

Wall Installation		A	B	C
Lead 6	60kg	130	450	4780
	70kg	107	370	4010
	110kg	57	197	2310
Lead 12	30kg	242	860	3410
	60kg	106	376	1555
	88kg	62	222	961
Lead 24	20kg	218	880	1356
	40kg	96	387	604
	50kg	71	288	454

(Unit : mm)

Vertical Installation		A	C
Lead 6	25kg	1229	1229
	30kg	1024	1024
	40kg	768	768
Lead 12	10kg	2439	2439
	15kg	1626	1626
	26kg	938	938
Lead 24	9kg	1485	1485
	10kg	1336	1336
	20kg	668	668

Static Loading Moment

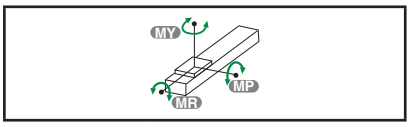

(Unit : N.m)

MY	1149
MP	1149
MR	558

* The data represented by the moment table is the center of gravity of the load.The length of the overhang is allowed in a single direction.
*Operation life is 10,000km when the product is using under the specified conditions.
*Data information is not for ceiling-mount inverse use.
Contact us for the details if you want to apply ceiling-mount inverse usage.
*The life and torque are calculated by setting the motor acceleration and deceleration for 0.2 seconds.

Options

P - MM - CMK

Standard PIN hole

Code	Instructions	Refer to
P	Standard PIN hole	P.677

Selectable Cable Leading Direction

Code	Instructions	Refer to
MW	Upper side	P.679 ~ P.680
MM	Bottom side	
ML	Left side	
MR	Right side	

Additional keyway for motor drive parts

Code	Instructions			Refer to
	Keyway Groove	Motor Position	Shipment Type	
CMK	Single (Limited to the motor side)	BC/M	Keyway Coupling	P.681 ~ P.682
		BL/BR/BM	Keyway Belt Pulley	
SKY	Double	BC/M	Keyway Coupling	
		BL/BR/BM	Keyway Belt Pulley	
SKN	Double	BC/M	Without Coupling (Please purchase and install by yourself)	
		BL/BR/BM	Without Belt Pulley (Please purchase and install by yourself)	

2D CAD 3D CAD • Download at www.toyorobot.com •

BC Motor Exposed (Sensor on the left sdie)

Unit : mm

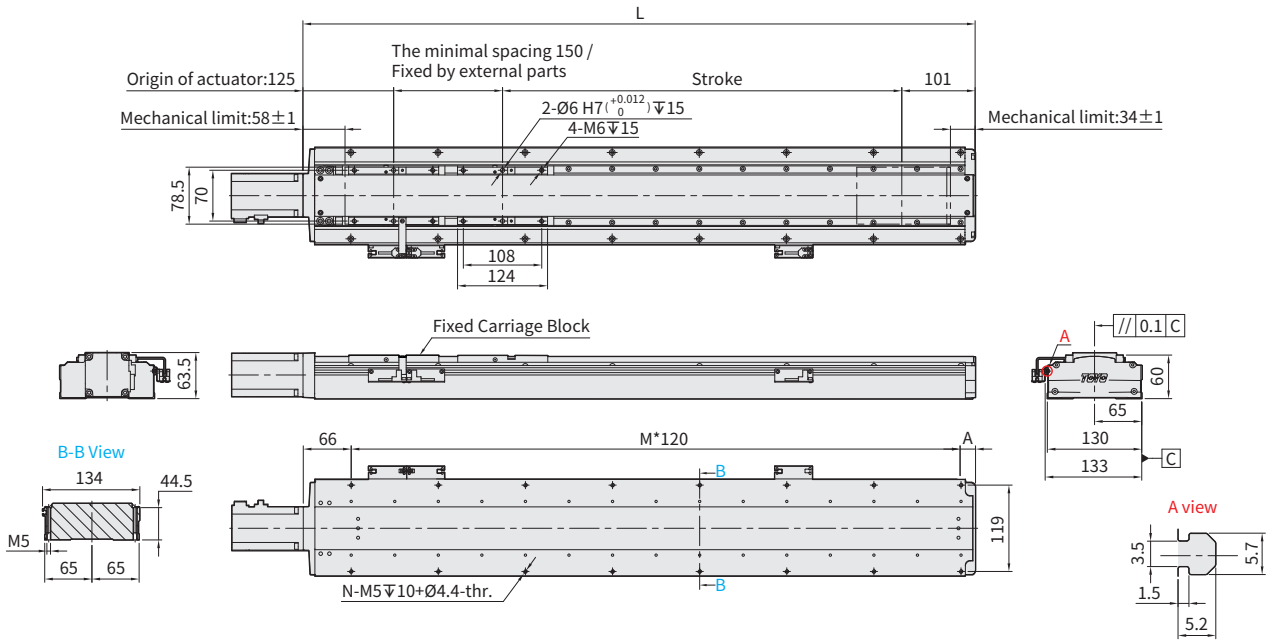

BC Motor Exposed (Sensor on the right side)

Unit : mm

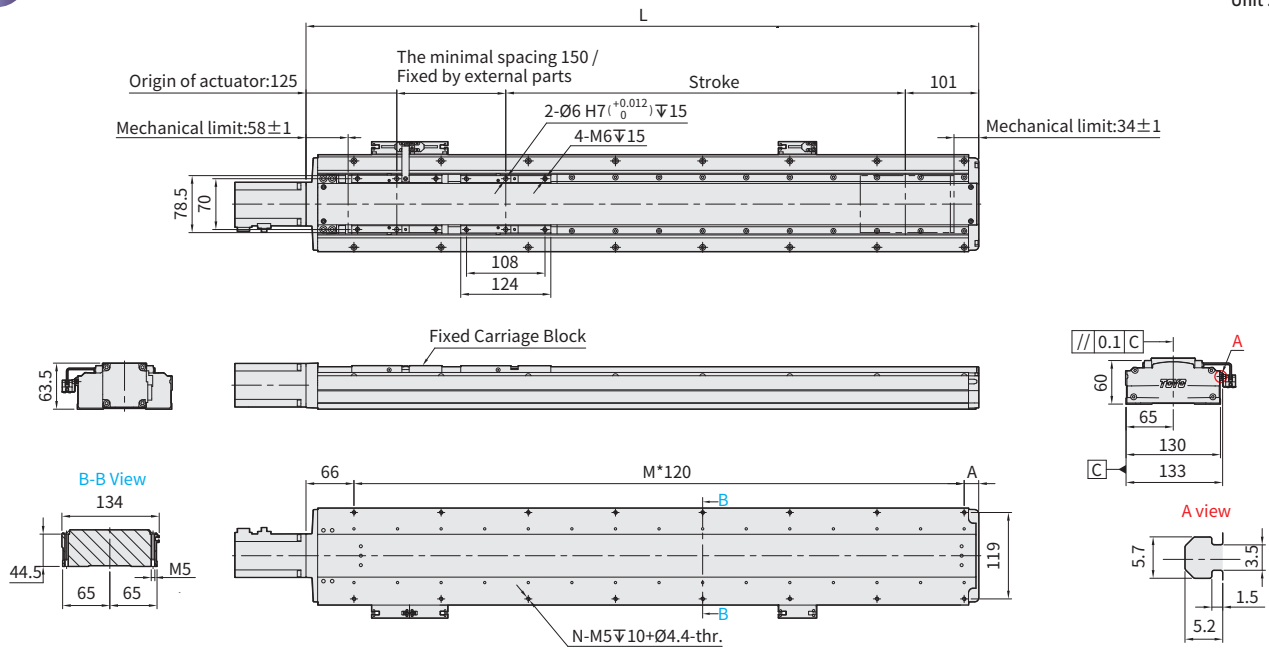

Stroke		50	100	150	200	250	300	350	400	450	500	550	600	650	700	750	800	850	900	950	1000	1050
Limit Stroke (±1)		60	110	160	210	260	310	360	410	460	510	560	610	660	710	760	810	860	910	960	1010	1060
L		426	476	526	576	626	676	726	776	826	876	926	976	1026	1076	1126	1176	1226	1276	1326	1376	1426
A		120	50	100	30	80	130	60	110	40	90	20	70	120	50	100	30	80	130	60	110	40
M		2	3	3	4	4	4	5	5	6	6	7	7	7	8	8	9	9	9	10	10	11
N		6	8	8	10	10	10	12	12	14	14	16	16	16	18	18	20	20	20	22	22	24
KG		6.63	7.11	7.59	8.06	8.54	9.01	9.48	9.96	10.44	10.91	11.39	11.86	12.33	12.81	13.29	13.76	14.24	14.71	15.18	15.66	16.14
Linear Speed mm/s	Lead 6	360							340	300	260	230	210	180	160	150	130	120	110		100	90
	Lead 12	720							680	600	520	460	420	360	320	300	260	240	220		200	180
	Lead 24	1440							1360	1200	1040	920	840	720	640	600	520	480	440		400	360

免費服務專線：台灣 Toll-Free Number Taiwan 0800-800-893

2D CAD 3D CAD • Download at www.toyorobot.com •

BL Motor Left Side (Sensor on the left sdie)

Unit : mm

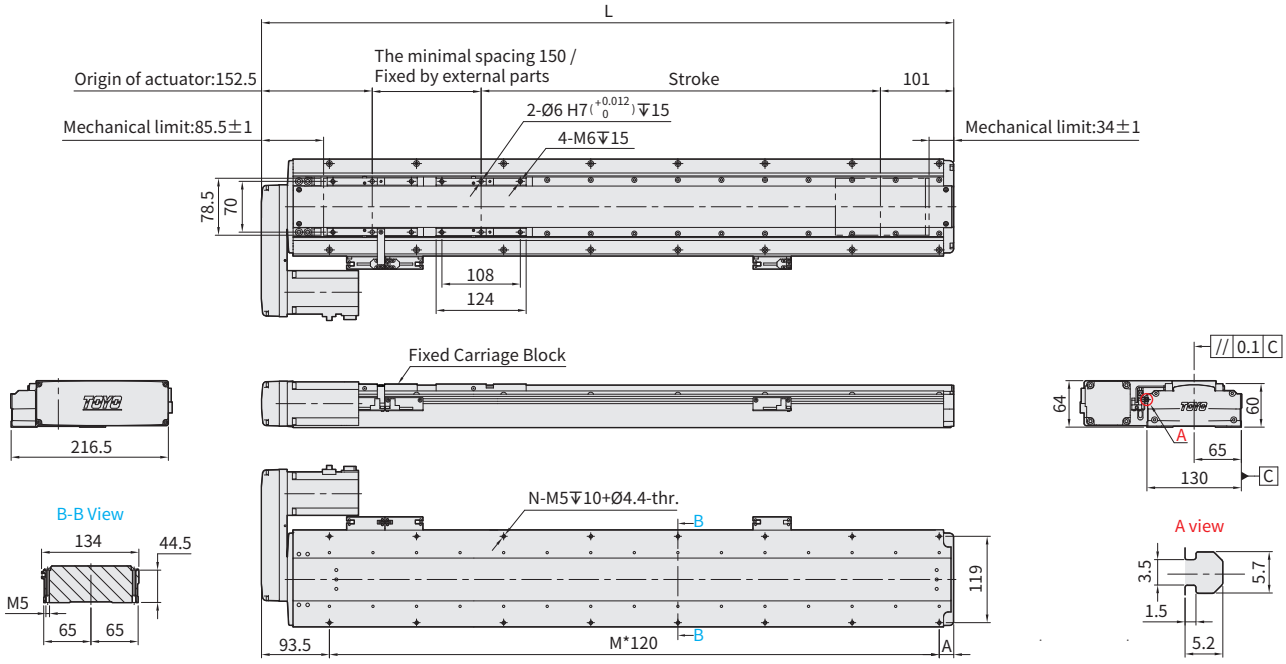

BL Motor Left Side (Sensor on the right side)

Unit : mm

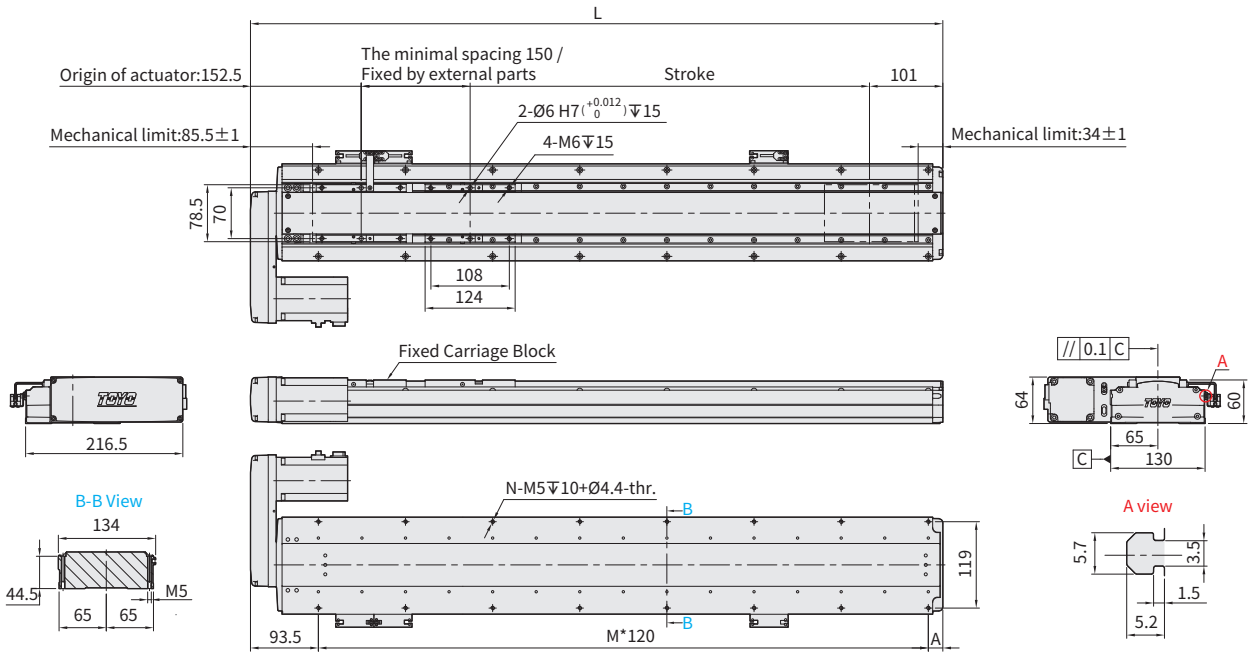

Stroke		50	100	150	200	250	300	350	400	450	500	550	600	650	700	750	800	850	900	950	1000	1050
Limit Stroke (±1)		60	110	160	210	260	310	360	410	460	510	560	610	660	710	760	810	860	910	960	1010	1060
L		453.5	503.5	553.5	603.5	653.5	703.5	753.5	803.5	853.5	903.5	953.5	1003.5	1053.5	1103.5	1153.5	1203.5	1253.5	1303.5	1353.5	1403.5	1453.5
A		120	50	100	30	80	130	60	110	40	90	20	70	120	50	100	30	80	130	60	110	40
M		2	3	3	4	4	4	5	5	6	6	7	7	7	8	8	9	9	9	10	10	11
N		6	8	8	10	10	10	12	12	14	14	16	16	16	18	18	20	20	20	22	22	24
KG		7.15	7.63	8.1	8.58	9.05	9.53	10	10.48	10.95	11.43	11.9	12.38	12.85	13.33	13.8	14.28	14.75	15.23	15.7	16.18	16.65
Linear Speed mm/s	Lead 6	360							340	300	260	230	210	180	160	150	130	120	110		100	90
	Lead 12	720							680	600	520	460	420	360	320	300	260	240	220		200	180
	Lead 24	1440							1360	1200	1040	920	840	720	640	600	520	480	440		400	360

2D CAD 3D CAD • Download at www.toyorobot.com •

BR Motor Right Side (Sensor on the left sdie)

Unit : mm

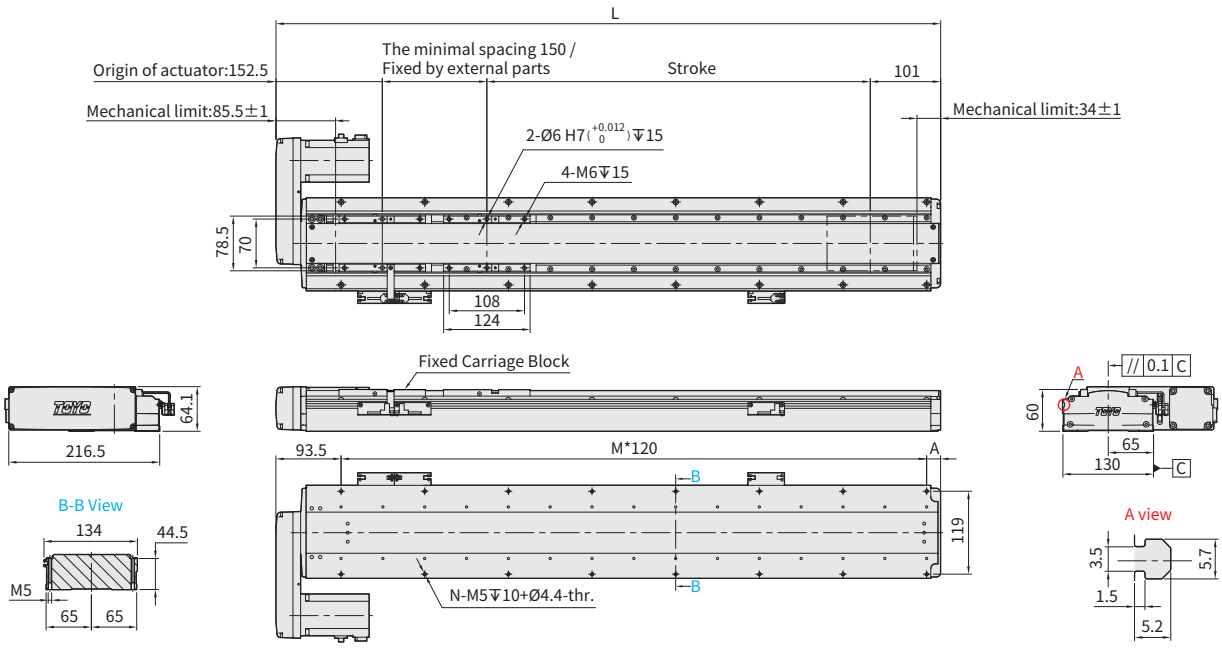

BR Motor Right Side (Sensor on the right side)

Unit : mm

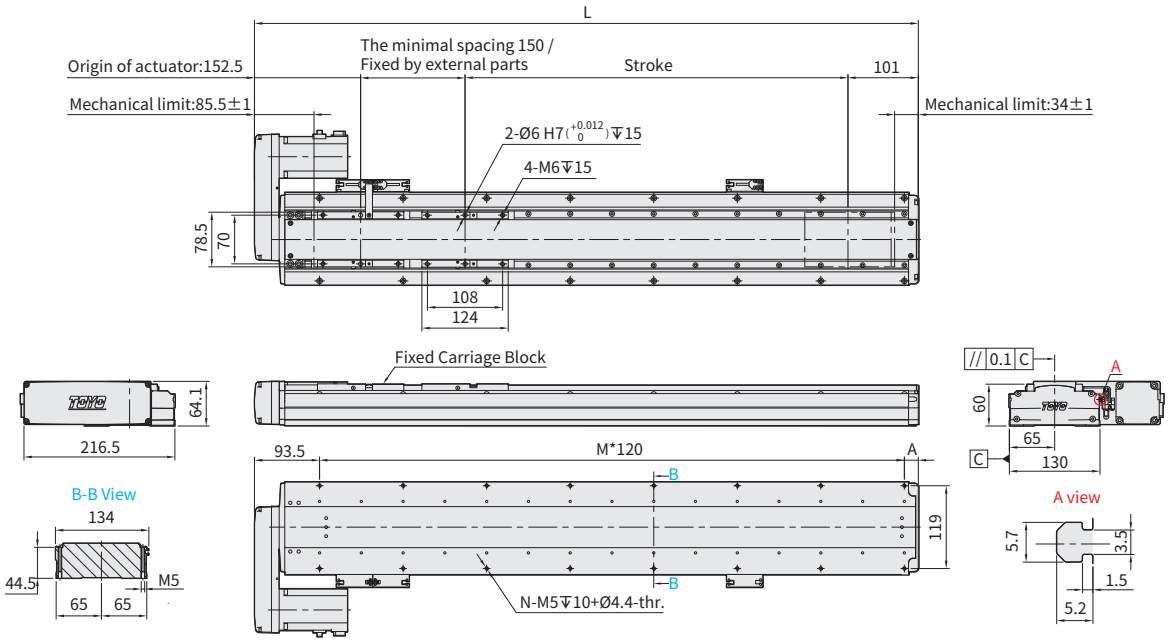

Stroke		50	100	150	200	250	300	350	400	450	500	550	600	650	700	750	800	850	900	950	1000	1050
Limit Stroke (±1)		60	110	160	210	260	310	360	410	460	510	560	610	660	710	760	810	860	910	960	1010	1060
L		453.5	503.5	553.5	603.5	653.5	703.5	753.5	803.5	853.5	903.5	953.5	1003.5	1053.5	1103.5	1153.5	1203.5	1253.5	1303.5	1353.5	1403.5	1453.5
A		120	50	100	30	80	130	60	110	40	90	20	70	120	50	100	30	80	130	60	110	40
M		2	3	3	4	4	4	5	5	6	6	7	7	7	8	8	9	9	9	10	10	11
N		6	8	8	10	10	10	12	12	14	14	16	16	16	18	18	20	20	20	22	22	24
KG		7.15	7.63	8.1	8.58	9.05	9.53	10	10.48	10.95	11.43	11.9	12.38	12.85	13.33	13.8	14.28	14.75	15.23	15.7	16.18	16.65
Linear Speed mm/s	Lead 6	360							340	300	260	230	210	180	160	150	130	120	110		100	90
	Lead 12	720							680	600	520	460	420	360	320	300	260	240	220		200	180
	Lead 24	1440							1360	1200	1040	920	840	720	640	600	520	480	440		400	360

免費服務專線：台灣 0800-800-893
Toll-Free Number Taiwan

2D CAD 3D CAD

• Download at www.toyorobot.com •

BM Motor Bottom Side (Sensor on the left sdie)

Unit : mm

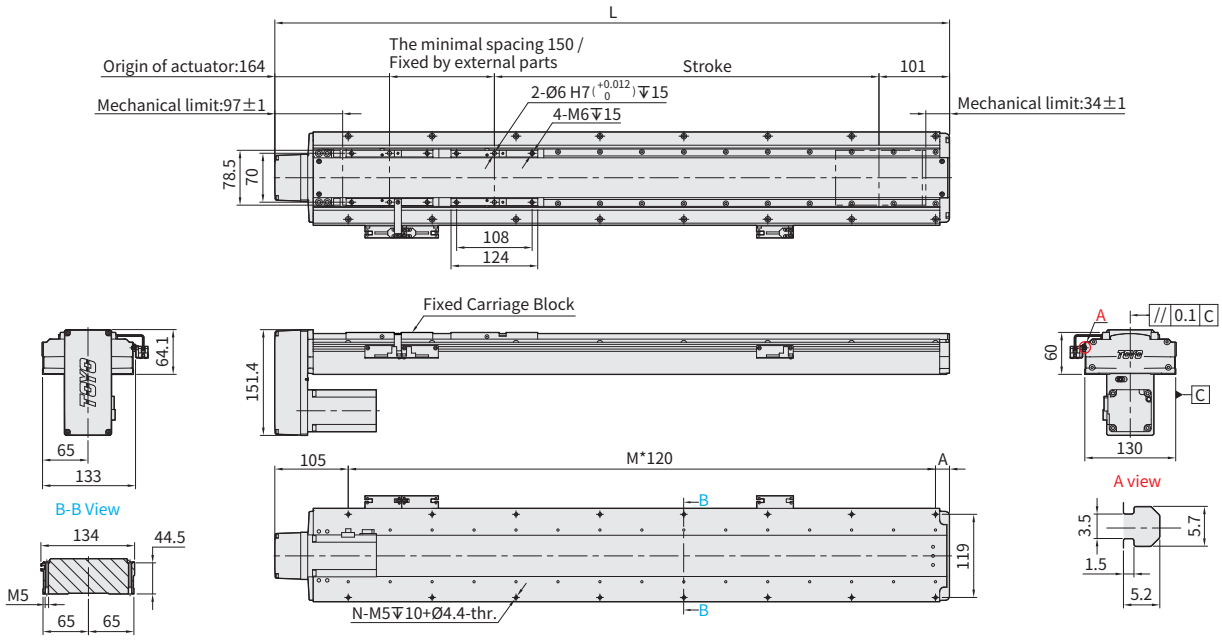

BM Motor Bottom Side (Sensor on the right side)

Unit : mm

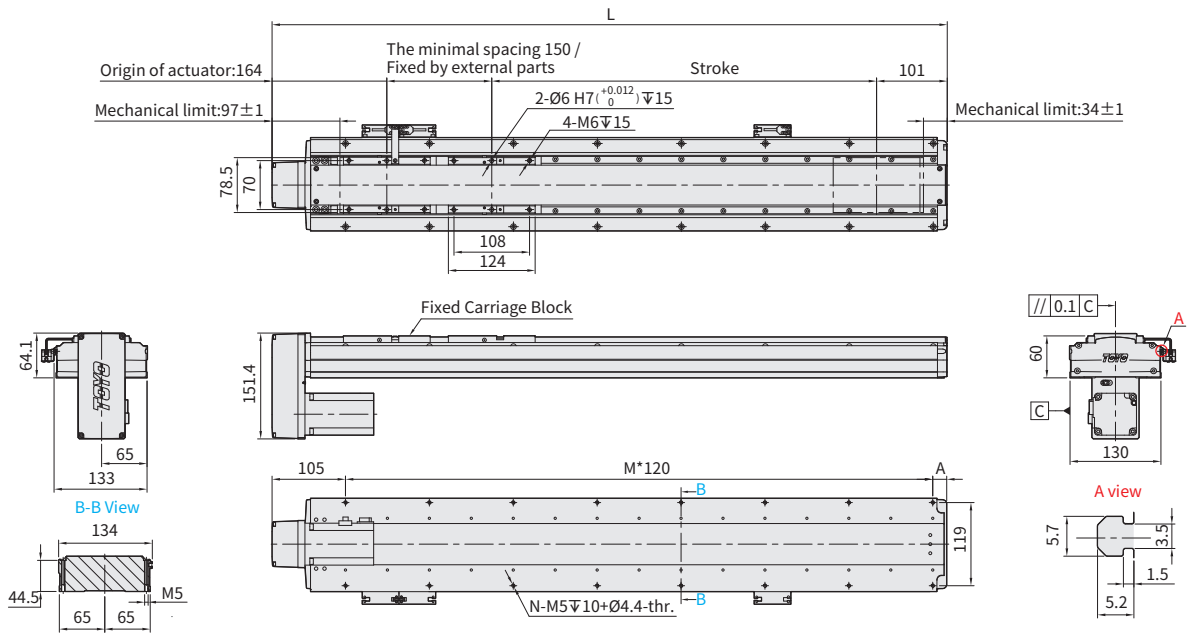

Stroke		50	100	150	200	250	300	350	400	450	500	550	600	650	700	750	800	850	900	950	1000	1050
Limit Stroke (±1)		60	110	160	210	260	310	360	410	460	510	560	610	660	710	760	810	860	910	960	1010	1060
L		465	515	565	615	665	715	765	815	865	915	965	1015	1065	1115	1165	1215	1265	1315	1365	1415	1465
A		120	50	100	30	80	130	60	110	40	90	20	70	120	50	100	30	80	130	60	110	40
M		2	3	3	4	4	4	5	5	6	6	7	7	7	8	8	9	9	9	10	10	11
N		6	8	8	10	10	10	12	12	14	14	16	16	16	18	18	20	20	20	22	22	24
KG		7.15	7.63	8.1	8.58	9.05	9.53	10	10.48	10.95	11.43	11.9	12.38	12.85	13.33	13.8	14.28	14.75	15.23	15.7	16.18	16.65
Linear Speed mm/s	Lead 6	360							340	300	260	230	210	180	160	150	130	120	110		100	90
	Lead 12	720							680	600	520	460	420	360	320	300	260	240	220		200	180
	Lead 24	1440							1360	1200	1040	920	840	720	640	600	520	480	440		400	360

ETH2-17D 1-axis

Ball Screw Drive

Max. stroke	Max. Speed	Motor Output	Ball Screw	Linear Guide
1300mm	2400mm/s	400W	ø20mm	15X12.5-2pcs

Ordering Method

ETH2-17D - L5 - 500 - BC - M40B- C3N5L - [Refer to the right page.] - 0001

Model | Options | Customization Order No.

Stroke

50-1300mm
50 mm Pitch

Sensor location

L	Left side
R	Right side

Ball Screw Lead

5	5mm
10	10mm
20	20mm
40	40mm

Motor Position

BC	Motor Exposed
BL	Motor Left Side
BR	Motor Right Side
BM	Motor Bottom Side

Motor Brand、Power Output

M	Mitsubishi	10	-	B
P	Panasonic	20	-	
Y	Yaskawa	40	400W	
T	Delta	75	-	

*If No Brake,No Description.

Home Sensor

Out Side	
C	Motor Side
D	Opposite Motor Side
No Sensor	
E	No Sensor

Limit Sensor

Out Side	
3	1 Pc
4	2 Pcs
6	3 Pcs
7	4 Pcs
8	5 Pcs
9	6 Pcs
No Sensor	
5	No Sensor

*When the stroke is 50mm, Home + limit sensors is 2 maximum (only C3/D3/E3/E4/E5 can be selected)

Output type & Cable length

N5	NPN+5M Cable
P2	PNP+2M Cable
P5	PNP+5M Cable
-	NPN+2M Cable

Specification

Performance	Repeatability		mm	±0.005						
	Lead		mm	5		10		20		40	
	Maximum Rotating speed		rpm	3600	3000	3600	3000	3600	3000	3600	3000
	Maximum linear speed ※1		mm/s	300	250	600	500	1200	1000	2400	2000
	Maximum Payload	Horizontal	kg	120	120	110	110	75	85	15	22
		Vertical (No regenerative resistor)	kg	40	50	24	26	10	11	9	10
		Vertical (External 200W regenerative resistor)	kg	50	50	30	30	17	17	15	15
	Rated Thrust		N	1356		678		339		170	
	Stroke (increments)		mm	50-1300mm/(50 increments)							
	Maximum acceleration		G	0.15	0.13	0.31	0.25	0.61	0.51	1.22	1.02
	Ball screw	Basic dynamic load rating Ca	N	17795		10295		5414		6406	
		Basic static load rating Coa	N	45617		22964		10877		15667	
	Linear Guide	Dynamic horizontal (100km)	N	48193							
		Static Horizontal	N	103488							
	Fixed bearing	Basic dynamic load rating Cr	N	9666							
		Static load rating Cor	N	6400							
Parts	AC Servo Motor Output		W	400							
	Ball Screw Ø		mm	C7Ø20							
	High Rigidity Linear Guide		mm	W15XH12.5							
	Coupling		mm	14X12							
	Home Sensor	Outside		T64N2(NPN)							

※1 During in a long stroke, it causes ballscrew deflection, the speed must reduce. (Please refer to the linear velocity from the data sheet below the dimension graph.)

Allowable Overhang

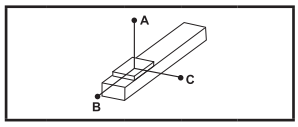

(Unit : mm)

Horizontal Installation		A	B	C
Lead 5	70kg	7775	516	141
	90kg	5814	369	101
	120kg	4079	240	66
Lead 10	65kg	2824	484	131
	85kg	2039	336	91
	110kg	1453	227	61
Lead 20	55kg	929	415	105
	75kg	615	266	67
	85kg	512	218	55
Lead 40	10kg	1558	1880	391
	15kg	999	1205	251
	22kg	644	776	161

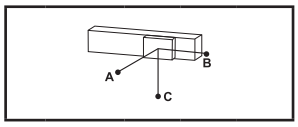

(Unit : mm)

Wall Installation		A	B	C
Lead 5	70kg	141	516	7775
	90kg	101	369	5814
	120kg	66	240	4079
Lead 10	65kg	131	484	2824
	85kg	91	336	2039
	110kg	61	227	1453
Lead 20	55kg	105	415	929
	75kg	67	266	615
	85kg	55	218	512
Lead 40	10kg	391	1880	1558
	15kg	251	1205	999
	22kg	161	776	644

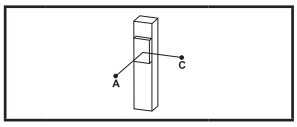

(Unit : mm)

Vertical Installation		A	C
Lead 5	30kg	1454	1454
	40kg	1090	1090
	50kg	872	872
Lead 10	24kg	1512	1512
	26kg	1396	1396
	30kg	1210	1210
Lead 20	10kg	2347	2347
	11kg	2133	2133
	17kg	1380	1380
Lead 40	9kg	1188	1188
	10kg	1070	1070
	15kg	713	713

Static Loading Moment

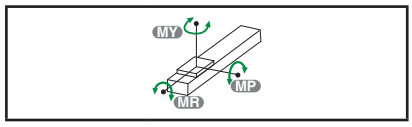

(Unit : N.m)

MY	1547
MP	1547
MR	709

* The data represented by the moment table is the center of gravity of the load.The length of the overhang is allowed in a single direction.
*Operation life is 10,000km when the product is using under the specified conditions.
*Data information is not for ceiling-mount inverse use.
Contact us for the details if you want to apply ceiling-mount inverse usage.
*The life and torque are calculated by setting the motor acceleration and deceleration for 0.2 seconds.

Options

P - MM - CMK

Standard PIN hole

Code	Instructions	Refer to
P	Standard PIN hole	P.677

Selectable Cable Leading Direction

Code	Instructions	Refer to
MW	Upper side	P.679 ~ P.680
MM	Bottom side	
ML	Left side	
MR	Right side	

Additional keyway for motor drive parts

Code	Instructions			Refer to
	Keyway Groove	Motor Position	Shipment Type	
CMK	Single (Limited to the motor side)	BC/M	Keyway Coupling	P.681 ~ P.682
		BL/BR/BM	Keyway Belt Pulley	
SKY	Double	BC/M	Keyway Coupling	
		BL/BR/BM	Keyway Belt Pulley	
SKN	Double	BC/M	Without Coupling (Please purchase and install by yourself)	
		BL/BR/BM	Without Belt Pulley (Please purchase and install by yourself)	

2D CAD 3D CAD • Download at www.toyorobot.com •

BC Motor Exposed (Sensor on the left sdie)

Unit : mm

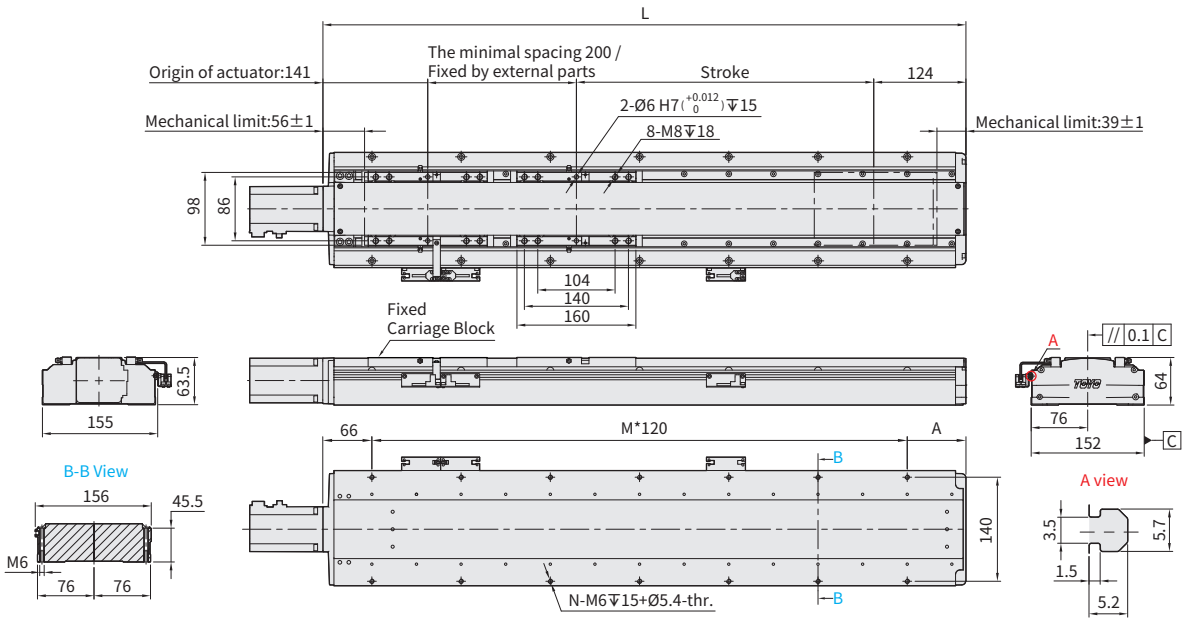

BC Motor Exposed (Sensor on the right side)

Unit : mm

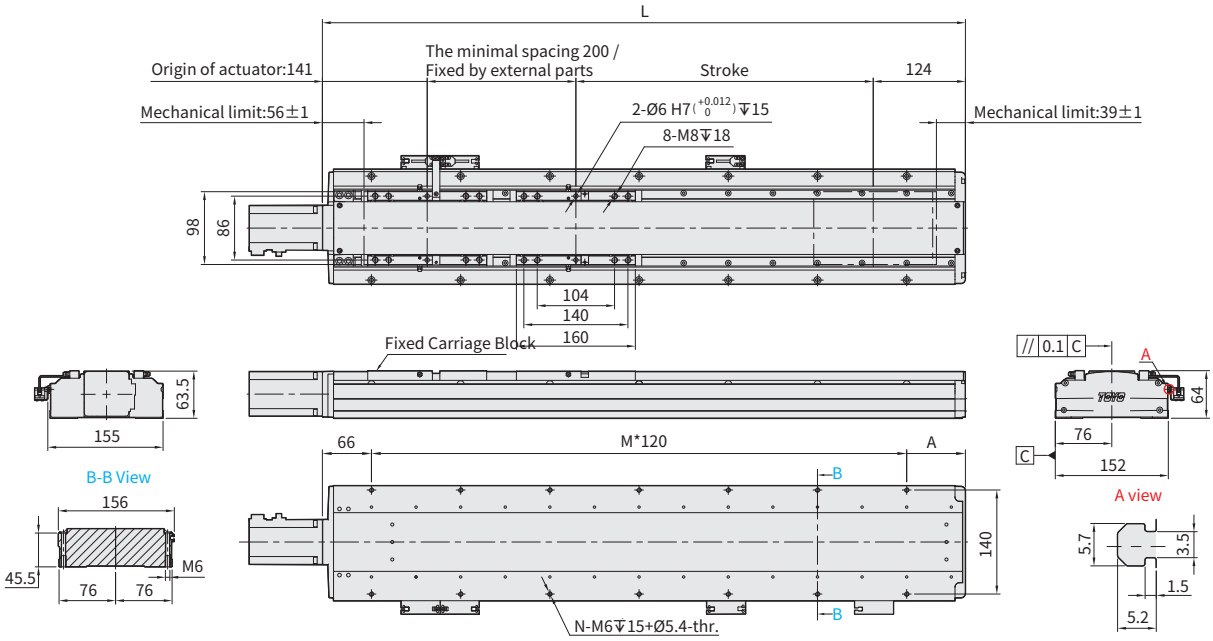

Stroke		50	100	150	200	250	300	350	400	450	500	550	600	650	700	750	800	850	900	950	1000	1050	1100	1150	1200	1250	1300
Limit Stroke (±1)		60	110	160	210	260	310	360	410	460	510	560	610	660	710	760	810	860	910	960	1010	1060	1110	1160	1210	1260	1310
L		515	565	615	665	715	765	815	865	915	965	1015	1065	1115	1165	1215	1265	1315	1365	1415	1465	1515	1565	1615	1665	1715	1765
A		89	19	69	119	49	99	29	79	129	59	109	39	89	19	69	119	49	99	29	79	129	59	109	39	89	19
M		3	4	4	4	5	5	6	6	6	7	7	8	8	9	9	9	10	10	11	11	11	12	12	13	13	14
N		8	10	10	10	12	12	14	14	14	16	16	18	18	20	20	20	22	22	24	24	24	26	26	28	28	30
KG		9.88	10.46	11.04	11.62	12.2	12.79	13.37	13.95	14.54	15.11	15.7	16.28	16.86	17.45	18.03	18.61	19.19	19.77	20.35	20.94	21.52	22.1	22.68	23.26	23.85	24.43
Linear Speed mm/s	Lead 5	300									275	250	225	200	183	167	150	142	133	117	108	100	92		83	75	
	Lead 10	600									550	500	450	400	367	333	300	283	267	233	217	200	183		167	150	
	Lead 20	1200									1100	1000	900	800	733	667	600	567	533	467	433	400	367		333	300	
	Lead 40	2400									2200	2000	1800	1600	1467	1333	1200	1133	1067	933	867	800	733		667	600	

免費服務專線：台灣 Toll-Free Number Taiwan 0800-800-893

2D CAD 3D CAD • Download at www.toyorobot.com •

BL Motor Left Side (Sensor on the left sdie)

Unit : mm

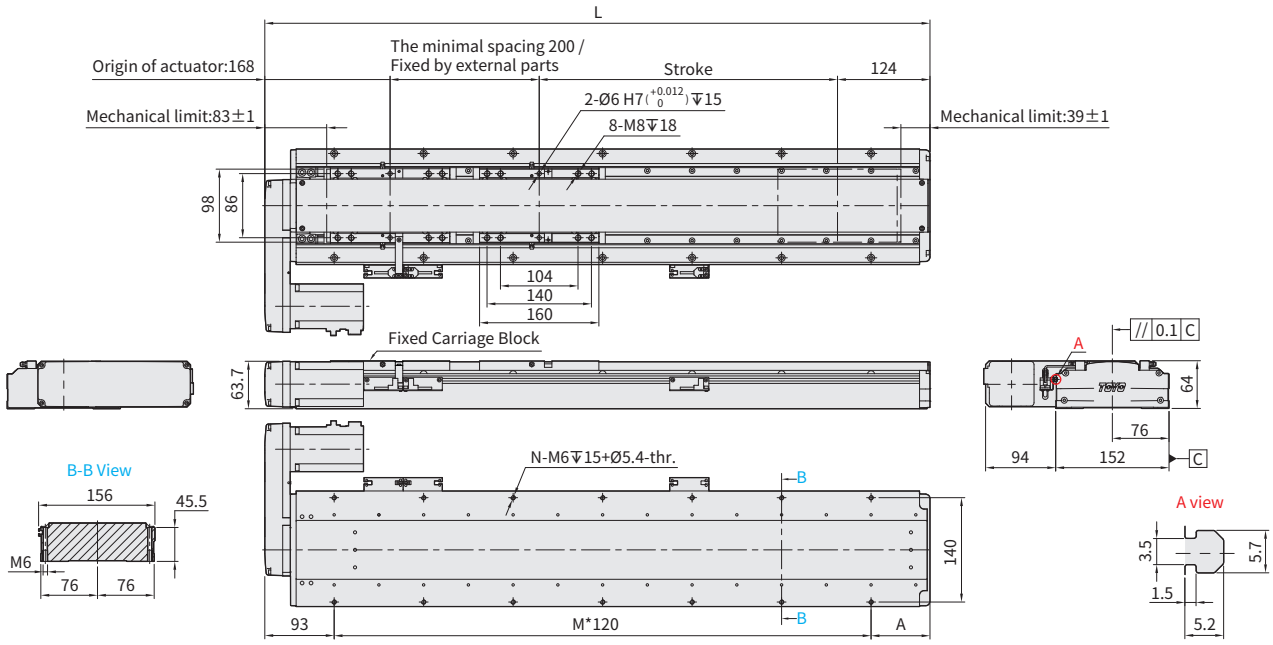

BL Motor Left Side (Sensor on the right side)

Unit : mm

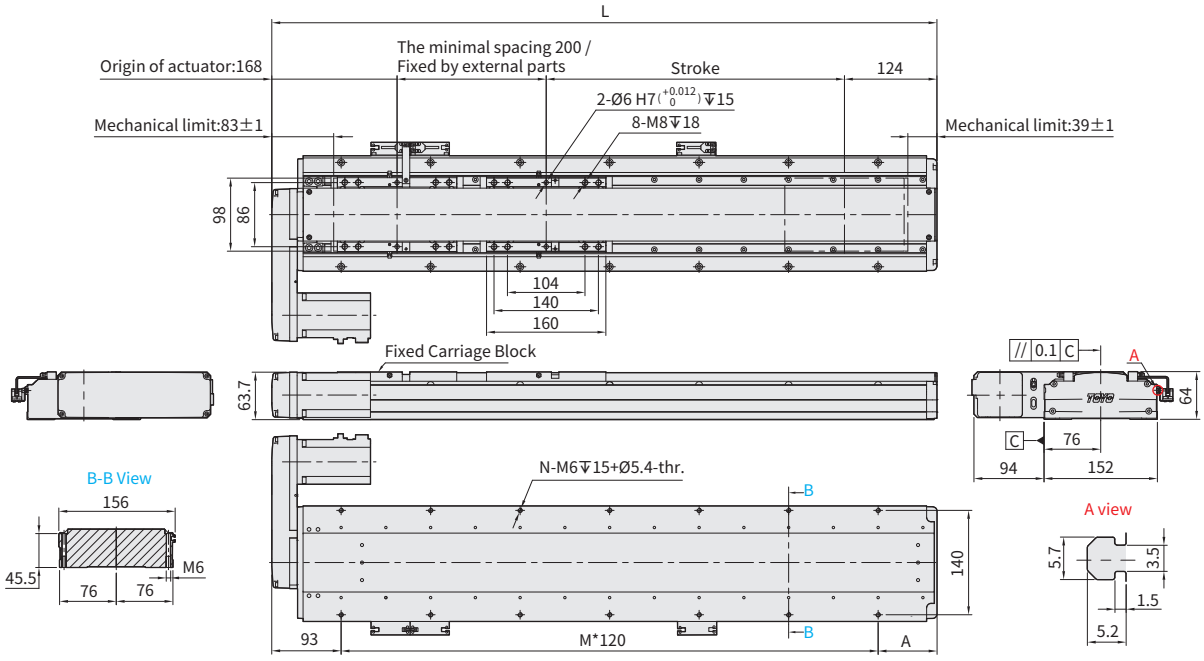

Stroke		50	100	150	200	250	300	350	400	450	500	550	600	650	700	750	800	850	900	950	1000	1050	1100	1150	1200	1250	1300
Limit Stroke (±1)		60	110	160	210	260	310	360	410	460	510	560	610	660	710	760	810	860	910	960	1010	1060	1110	1160	1210	1260	1310
L		542	592	642	692	742	792	842	892	942	992	1042	1092	1142	1192	1242	1292	1342	1392	1442	1492	1542	1592	1642	1692	1742	1792
A		89	19	69	119	49	99	29	79	129	59	109	39	89	19	69	119	49	99	29	79	129	59	109	39	89	19
M		3	4	4	4	5	5	6	6	6	7	7	8	8	9	9	9	10	10	11	11	11	12	12	13	13	14
N		8	10	10	10	12	12	14	14	14	16	16	18	18	20	20	20	22	22	24	24	24	26	26	28	28	30
KG		10.48	11.06	11.65	12.22	12.81	13.39	13.97	14.56	15.14	15.72	16.3	16.88	17.46	18.05	18.63	19.21	19.79	20.37	20.96	21.54	22.12	22.7	23.28	23.87	24.45	25.03
Linear Speed mm/s	Lead 5	300									275	250	225	200	183	167	150	142	133	117	108	100	92		83	75	
	Lead 10	600									550	500	450	400	367	333	300	283	267	233	217	200	183		167	150	
	Lead 20	1200									1100	1000	900	800	733	667	600	567	533	467	433	400	367		333	300	
	Lead 40	2400									2200	2000	1800	1600	1467	1333	1200	1133	1067	933	867	800	733		667	600	

2D CAD 3D CAD • Download at www.toyorobot.com •

BR Motor Right Side (Sensor on the left sdie)

Unit : mm

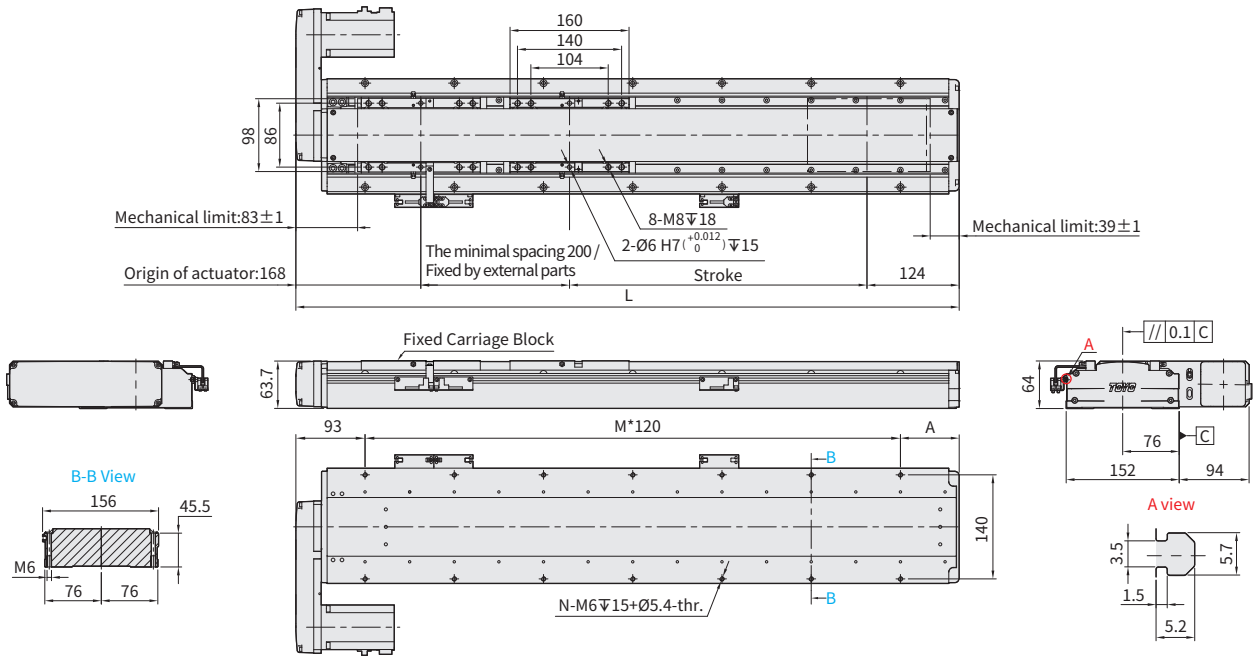

BR Motor Right Side (Sensor on the right side)

Unit : mm

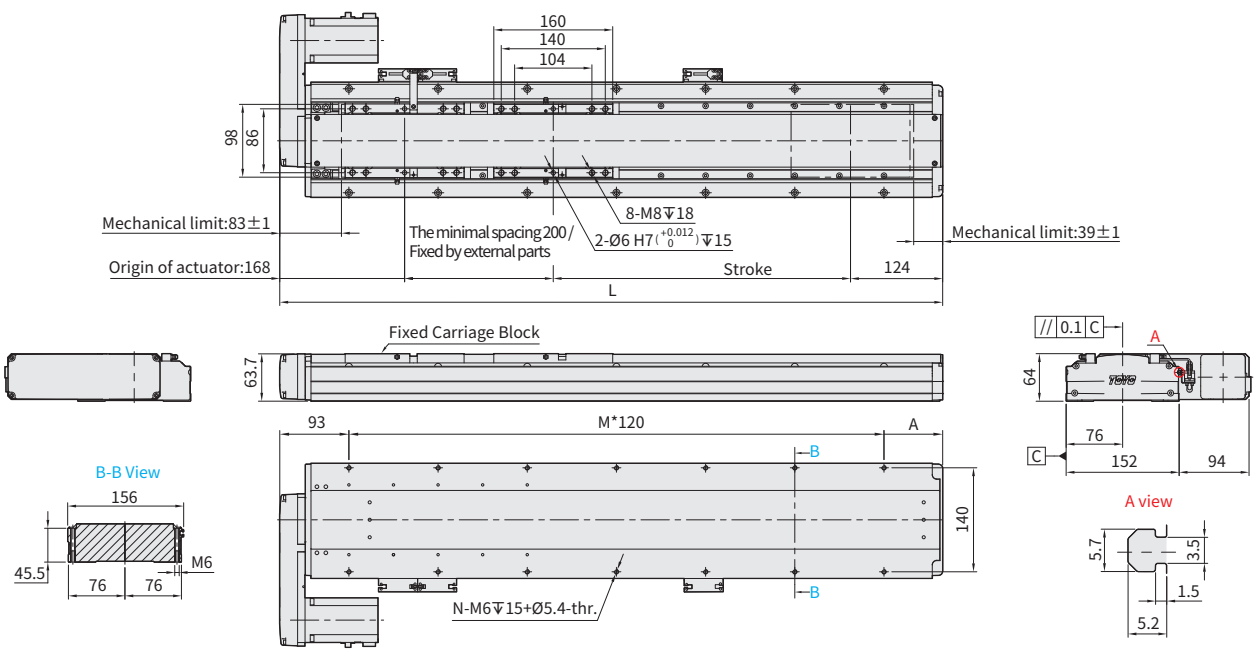

Stroke		50	100	150	200	250	300	350	400	450	500	550	600	650	700	750	800	850	900	950	1000	1050	1100	1150	1200	1250	1300
Limit Stroke (±1)		60	110	160	210	260	310	360	410	460	510	560	610	660	710	760	810	860	910	960	1010	1060	1110	1160	1210	1260	1310
L		542	592	642	692	742	792	842	892	942	992	1042	1092	1142	1192	1242	1292	1342	1392	1442	1492	1542	1592	1642	1692	1742	1792
A		89	19	69	119	49	99	29	79	129	59	109	39	89	19	69	119	49	99	29	79	129	59	109	39	89	19
M		3	4	4	4	5	5	6	6	6	7	7	8	8	9	9	9	10	10	11	11	11	12	12	13	13	14
N		8	10	10	10	12	12	14	14	14	16	16	18	18	20	20	20	22	22	24	24	24	26	26	28	28	30
KG		10.48	11.06	11.65	12.22	12.81	13.39	13.97	14.56	15.14	15.72	16.3	16.88	17.46	18.05	18.63	19.21	19.79	20.37	20.96	21.54	22.12	22.7	23.28	23.87	24.45	25.03
Linear Speed mm/s	Lead 5	300									275	250	225	200	183	167	150	142	133	117	108	100	92		83	75	
	Lead 10	600									550	500	450	400	367	333	300	283	267	233	217	200	183		167	150	
	Lead 20	1200									1100	1000	900	800	733	667	600	567	533	467	433	400	367		333	300	
	Lead 40	2400									2200	2000	1800	1600	1467	1333	1200	1133	1067	933	867	800	733		667	600	

免費服務專線：台灣 0800-800-893
Toll-Free Number Taiwan

2D CAD 3D CAD

• Download at www.toyorobot.com •

BM Motor Bottom Side (Sensor on the left sdie)

Unit : mm

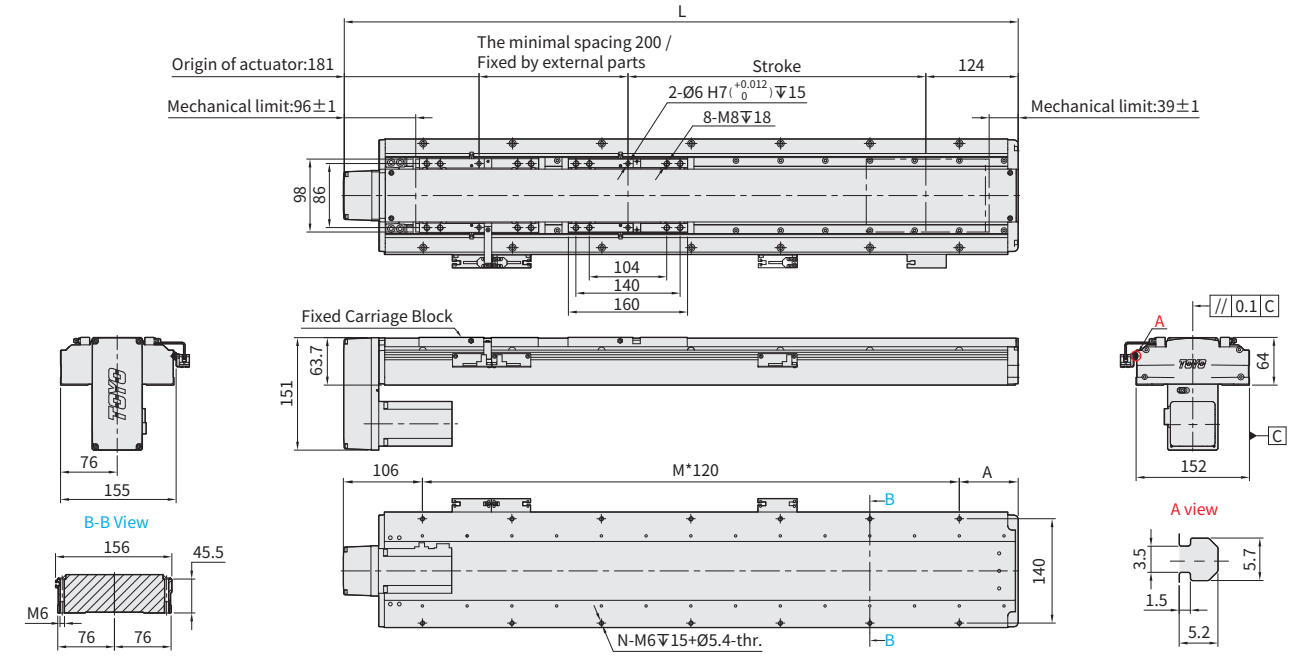

BM Motor Bottom Side (Sensor on the right side)

Unit : mm

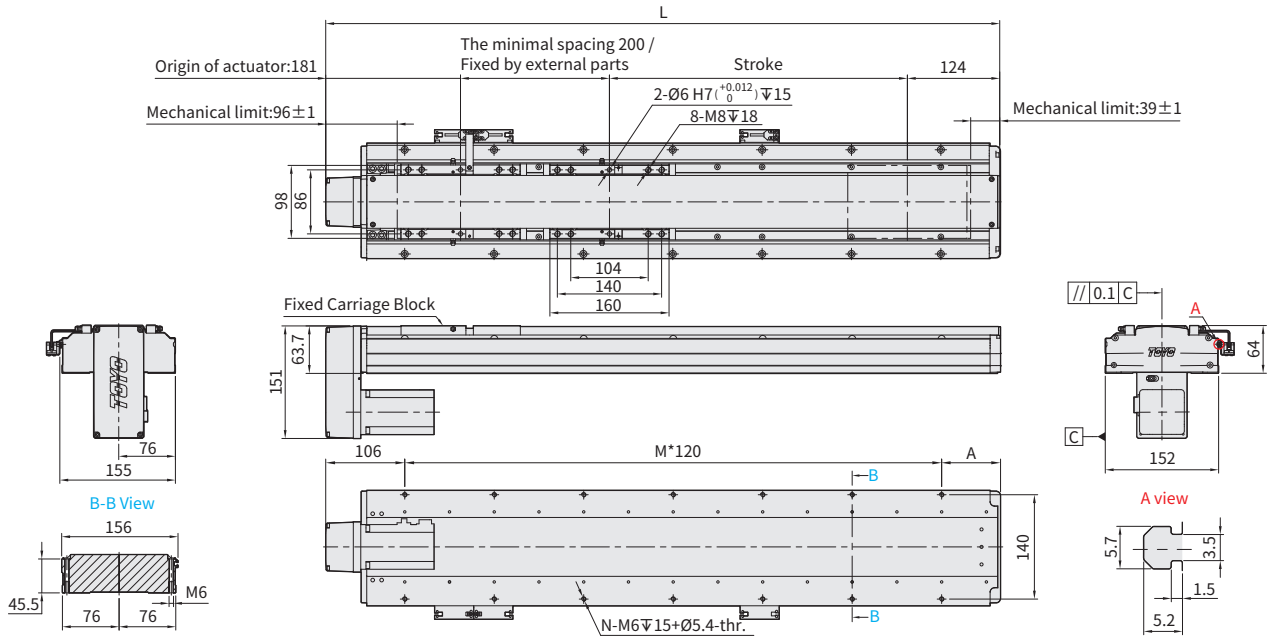

Stroke		50	100	150	200	250	300	350	400	450	500	550	600	650	700	750	800	850	900	950	1000	1050	1100	1150	1200	1250	1300
Limit Stroke (±1)		60	110	160	210	260	310	360	410	460	510	560	610	660	710	760	810	860	910	960	1010	1060	1110	1160	1210	1260	1310
L		555	605	655	705	755	805	855	905	955	1005	1055	1105	1155	1205	1255	1305	1355	1405	1455	1505	1555	1605	1655	1705	1755	1805
A		89	19	69	119	49	99	29	79	129	59	109	39	89	19	69	119	49	99	29	79	129	59	109	39	89	19
M		3	4	4	4	5	5	6	6	6	7	7	8	8	9	9	9	10	10	11	11	11	12	12	13	13	14
N		8	10	10	10	12	12	14	14	14	16	16	18	18	20	20	20	22	22	24	24	24	26	26	28	28	30
KG		10.48	11.06	11.65	12.24	12.81	13.39	13.97	14.56	15.14	15.72	16.3	16.88	17.46	18.05	18.63	19.21	19.79	20.37	20.96	21.54	22.12	22.7	23.28	23.87	24.45	25.03
Linear Speed mm/s	Lead 5	300									275	250	225	200	183	167	150	142	133	117	108	100	92		83	75	
	Lead 10	600									550	500	450	400	367	333	300	283	267	233	217	200	183		167	150	
	Lead 20	1200									1100	1000	900	800	733	667	600	567	533	467	433	400	367		333	300	
	Lead 40	2400									2200	2000	1800	1600	1467	1333	1200	1133	1067	933	867	800	733		667	600	

ETH2-22D 1-axis

▶ Ball Screw Drive

Max. stroke	Max. Speed	Motor Output	Ball Screw	Linear Guide
1550mm	1500mm/s	750W	ø25mm	20X16.3-2pcs

Ordering Method

ETH2-22D - L5 - 500 - BC - M75B- C3N5L - [Refer to the right page.] - 0001

Model | Options | Customization Order No.

Ball Screw Lead

5	5mm
10	10mm
25	25mm

Stroke

50-1550mm
50 mm Pitch

Motor Position

BC	Motor Exposed
BL	Motor Left Side
BR	Motor Right Side
BM	Motor Bottom Side

Motor Brand、Power Output

M	Mitsubishi	10	-	B
P	Panasonic	20	-	
Y	Yaskawa	40	-	
T	Delta	75	750W	

*If No Brake,No Description.

Home Sensor

Out Side	
C	Motor Side
D	Opposite Motor Side
No Sensor	
E	No Sensor

Limit Sensor

Out Side	
3	1 Pc
4	2 Pcs
6	3 Pcs
7	4 Pcs
8	5 Pcs
9	6 Pcs
No Sensor	
5	No Sensor

*When the stroke is 50mm, Home + limit sensors is 2 maximum (only C3/D3/E3/E4/E5 can be selected)

Sensor location

L	Left side
R	Right side

Output type & Cable length

N5	NPN+5M Cable
P2	PNP+2M Cable
P5	PNP+5M Cable
-	NPN+2M Cable

Specification

Performance	Repeatability		mm	±0.005					
	Lead		mm	5		10		25	
	Maximum Rotating speed		rpm	3600	3000	3600	3000	3600	3000
	Maximum linear speed ※1		mm/s	300	250	600	500	1500	1250
	Maximum Payload	Horizontal (No regenerative resistor)	kg	150	150	150	150	40	80
		Horizontal (External 200W regenerative resistor)	kg	-	-	-	-	100	105
		Vertical (No regenerative resistor)	kg	55	60	30	33	13	15
		Vertical (External 200W regenerative resistor)	kg	60	65	35	38	18	23
	Rated Thrust		N	2553		1276		511	
	Stroke (increments)		mm	50-1550mm/ (50 increments)					
	Maximum acceleration		G	0.15	0.13	0.31	0.25	0.76	0.64
	Ball screw	Basic dynamic load rating Ca	N	11116		16069		8270	
		Basic static load rating Coa	N	27338		45450		21572	
	Linear Guide	Dynamic horizontal (100km)	N	74176					
		Static Horizontal	N	161040					
	Fixed bearing	Basic dynamic load rating Cr	N	22093					
		Static load rating Cor	N	15100					
Parts	AC Servo Motor Output		W	750					
	Ball Screw Ø		mm	C7Ø25					
	High Rigidity Linear Guide		mm	W20XH16.3					
	Coupling		mm	19X17					
	Home Sensor	Outside		T64N2(NPN)					

※1 During in a long stroke, it causes ballscrew deflection, the speed must reduce. (Please refer to the linear velocity from the data sheet below the dimension graph.)

Allowable Overhang

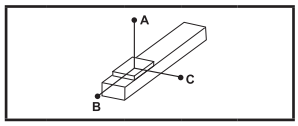

(Unit : mm)

Horizontal Installation		A	B	C
Lead 5	100kg	10507	733	235
	125kg	8143	549	176
	150kg	6556	426	136
Lead 10	100kg	3506	626	197
	125kg	2674	464	145
	150kg	2115	355	111
Lead 25	40kg	1672	1095	301
	80kg	712	454	125
	105kg	482	301	83

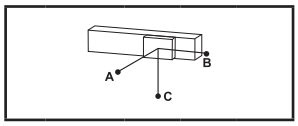

(Unit : mm)

Wall Installation		A	B	C
Lead 5	100kg	235	733	10507
	125kg	176	549	8143
	150kg	136	426	6556
Lead 10	100kg	197	626	3506
	125kg	145	464	2674
	150kg	111	355	2115
Lead 25	40kg	301	1095	1672
	80kg	125	454	712
	105kg	83	301	482

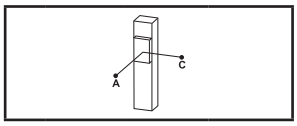

(Unit : mm)

Vertical Installation		A	C
Lead 5	55kg	1568	1568
	62kg	1391	1391
	65kg	1327	1327
Lead 10	30kg	2381	2381
	33kg	2164	2164
	38kg	1879	1879
Lead 25	13kg	2683	2683
	18kg	1938	1938
	23kg	1516	1516

Static Loading Moment

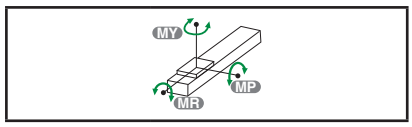

(Unit : N.m)

MY	3111
MP	3111
MR	1667

* The data represented by the moment table is the center of gravity of the load.The length of the overhang is allowed in a single direction.
*Operation life is 10,000km when the product is using under the specified conditions.
*Data information is not for ceiling-mount inverse use.
Contact us for the details if you want to apply ceiling-mount inverse usage.
*The life and torque are calculated by setting the motor acceleration and deceleration for 0.2 seconds.

Options

P - MM - CMK

Standard PIN hole

Code	Instructions	Refer to
P	Standard PIN hole	P.677

Selectable Cable Leading Direction

Code	Instructions	Refer to
MW	Upper side	P.679 ~ P.680
MM	Bottom side	
ML	Left side	
MR	Right side	

Additional keyway for motor drive parts

Code	Instructions			Refer to
	Keyway Groove	Motor Position	Shipment Type	
CMK	Single (Limited to the motor side)	BC/M	Keyway Coupling	P.681 ~ P.682
		BL/BR/BM	Keyway Belt Pulley	
SKY	Double	BC/M	Keyway Coupling	
		BL/BR/BM	Keyway Belt Pulley	
SKN	Double	BC/M	Without Coupling (Please purchase and install by yourself)	
		BL/BR/BM	Without Belt Pulley (Please purchase and install by yourself)	

2D CAD 3D CAD • Download at www.toyorobot.com •

BC Motor Exposed (Sensor on the left sdie)

Unit : mm

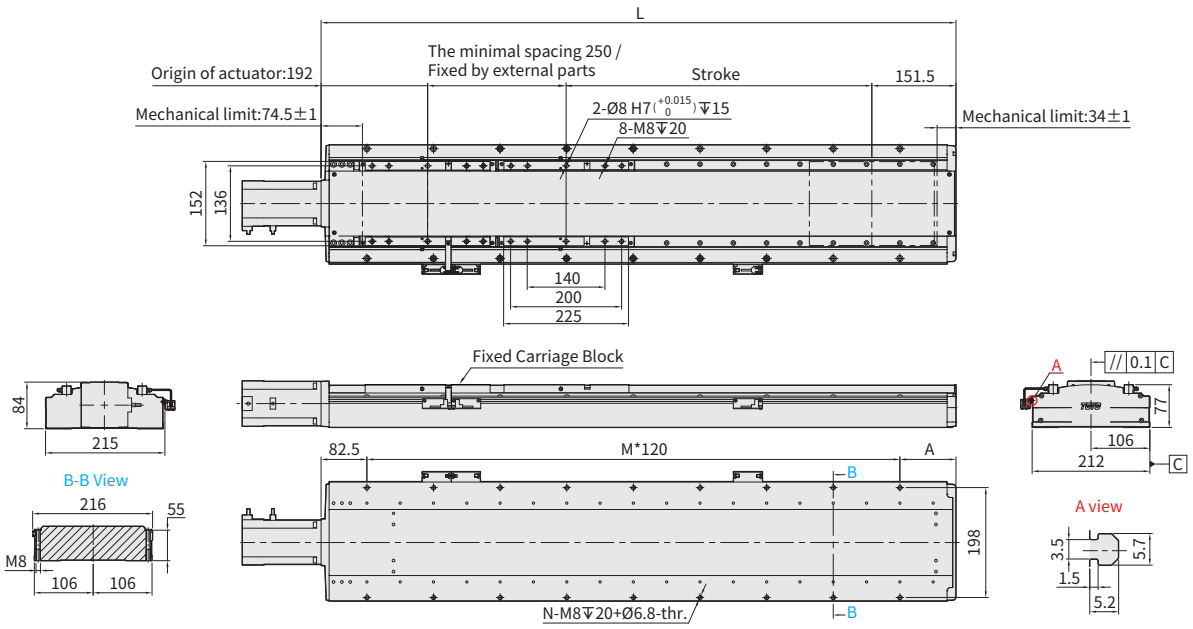

BC Motor Exposed (Sensor on the right side)

Unit : mm

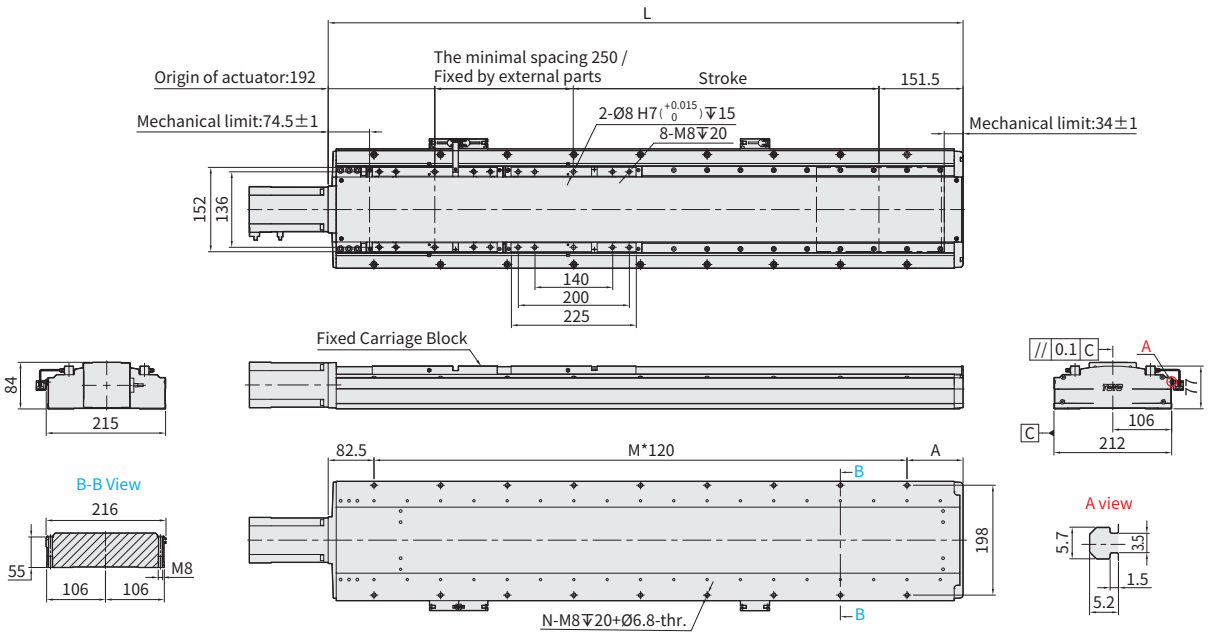

Stroke		50	100	150	200	250	300	350	400	450	500	550	600	650	700	750	800	850	900	950	1000	1050	1100	1150	1200	1250	1300	1350	1400	1450	1500	1550
Limit Stroke (±1)		60	110	160	210	260	310	360	410	460	510	560	610	660	710	760	810	860	910	960	1010	1060	1110	1160	1210	1260	1310	1360	1410	1460	1510	1560
L		643.5	693.5	743.5	793.5	843.5	893.5	943.5	993.5	1043.5	1093.5	1143.5	1193.5	1243.5	1293.5	1343.5	1393.5	1443.5	1493.5	1543.5	1593.5	1643.5	1693.5	1743.5	1793.5	1843.5	1893.5	1943.5	1993.5	2043.5	2093.5	2143.5
A		81	131	61	111	41	91	21	71	121	51	101	31	81	131	61	111	41	91	21	71	121	51	101	31	81	131	61	111	41	91	21
M		4	5	5	5	6	6	7	7	7	8	8	9	9	10	10	10	11	11	12	12	12	13	13	14	14	15	15	15	16	16	17
N		10	12	12	12	14	14	16	16	16	18	18	20	20	22	22	22	24	24	26	26	26	28	28	30	30	32	32	32	34	34	36
KG		20.41	21.35	22.28	23.21	24.16	25.1	26.03	26.97	27.9	28.84	29.78	30.72	31.66	32.6	33.53	34.47	35.41	36.35	37.29	38.23	39.16	40.1	41.03	41.97	42.91	43.85	44.78	45.72	46.66	47.6	48.54
Linear Speed mm/s	Lead 5	300									275	250	233	208	192	175	167	150	142	133	125	117	108	100	92		83	75		67		
	Lead 10	600									550	500	467	417	383	350	333	300	283	267	250	233	217	200	183		167	150		133		
	Lead 25	1500									1375	1250	1167	1042	958	875	833	750	708	667	625	583	542	500	458		417	375		333		

免費服務專線：台灣 Toll-Free Number Taiwan 0800-800-893

2D CAD 3D CAD

• Download at www.toyorobot.com •

BL Motor Left Side (Sensor on the left sdie)

Unit : mm

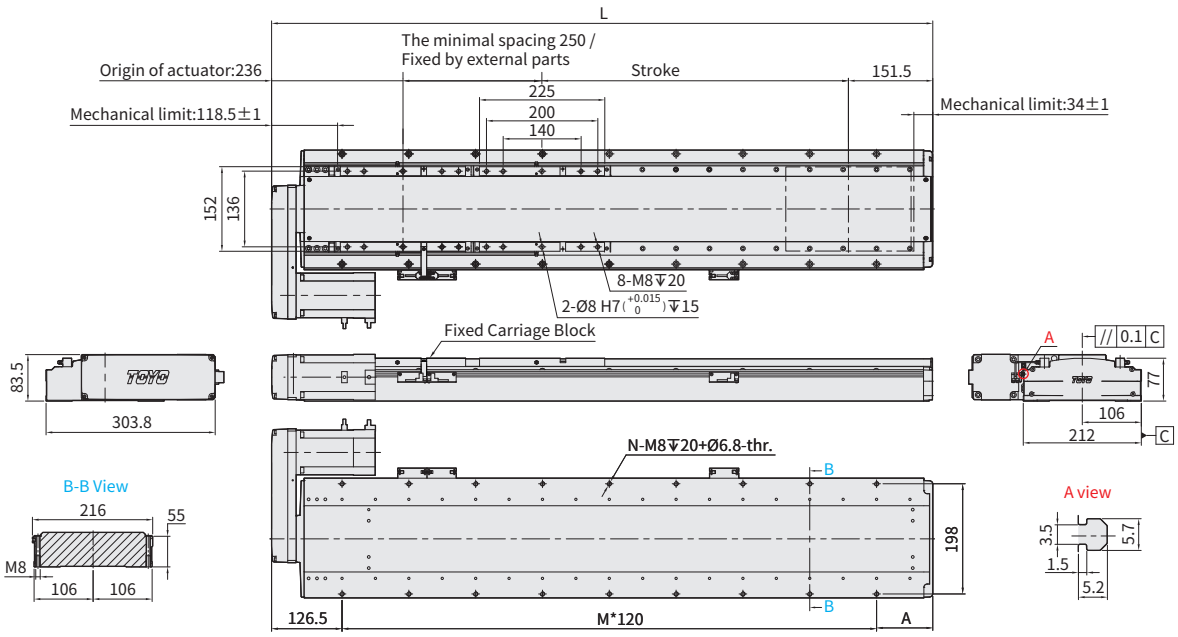

BL Motor Left Side (Sensor on the right side)

Unit : mm

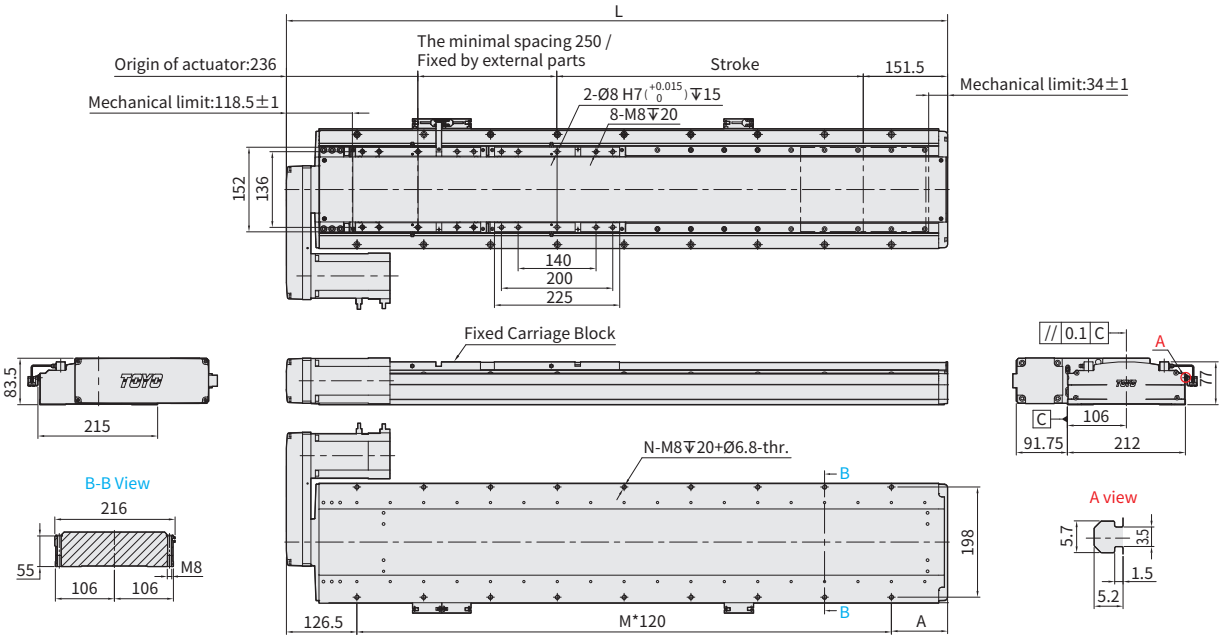

Stroke		50	100	150	200	250	300	350	400	450	500	550	600	650	700	750	800	850	900	950	1000	1050	1100	1150	1200	1250	1300	1350	1400	1450	1500	1550
Limit Stroke (±1)		60	110	160	210	260	310	360	410	460	510	560	610	660	710	760	810	860	910	960	1010	1060	1110	1160	1210	1260	1310	1360	1410	1460	1510	1560
L		687.5	737.5	787.5	837.5	887.5	937.5	987.5	1037.5	1087.5	1137.5	1187.5	1237.5	1287.5	1337.5	1387.5	1437.5	1487.5	1537.5	1587.5	1637.5	1687.5	1737.5	1787.5	1837.5	1887.5	1937.5	1987.5	2037.5	2087.5	2137.5	2187.5
A		81	131	61	111	41	91	21	71	121	51	101	31	81	131	61	111	41	91	21	71	121	51	101	31	81	131	61	111	41	91	21
M		4	5	5	5	6	6	7	7	7	8	8	9	9	10	10	10	11	11	12	12	12	13	13	14	14	15	15	15	16	16	17
N		10	12	12	12	14	14	16	16	16	18	18	20	20	22	22	22	24	24	26	26	26	28	28	30	30	32	32	32	34	34	36
KG		21.49	22.42	23.36	24.29	25.23	26.17	27.11	28.05	28.98	29.92	30.86	31.8	32.74	33.68	34.61	35.55	36.49	37.42	38.36	39.3	40.23	41.17	42.11	43.05	43.99	44.93	45.86	46.8	47.74	48.68	49.62
Linear Speed mm/s	Lead 5	300									275	250	233	208	192	175	167	150	142	133	125	117	108	100	92		83	75		67		
	Lead 10	600									550	500	467	417	383	350	333	300	283	267	250	233	217	200	183		167	150		133		
	Lead 25	1500									1375	1250	1167	1042	958	875	833	750	708	667	625	583	542	500	458		417	375		333		

2D CAD 3D CAD

• Download at www.toyorobot.com •

BR Motor Right Side (Sensor on the left sdie)

Unit : mm

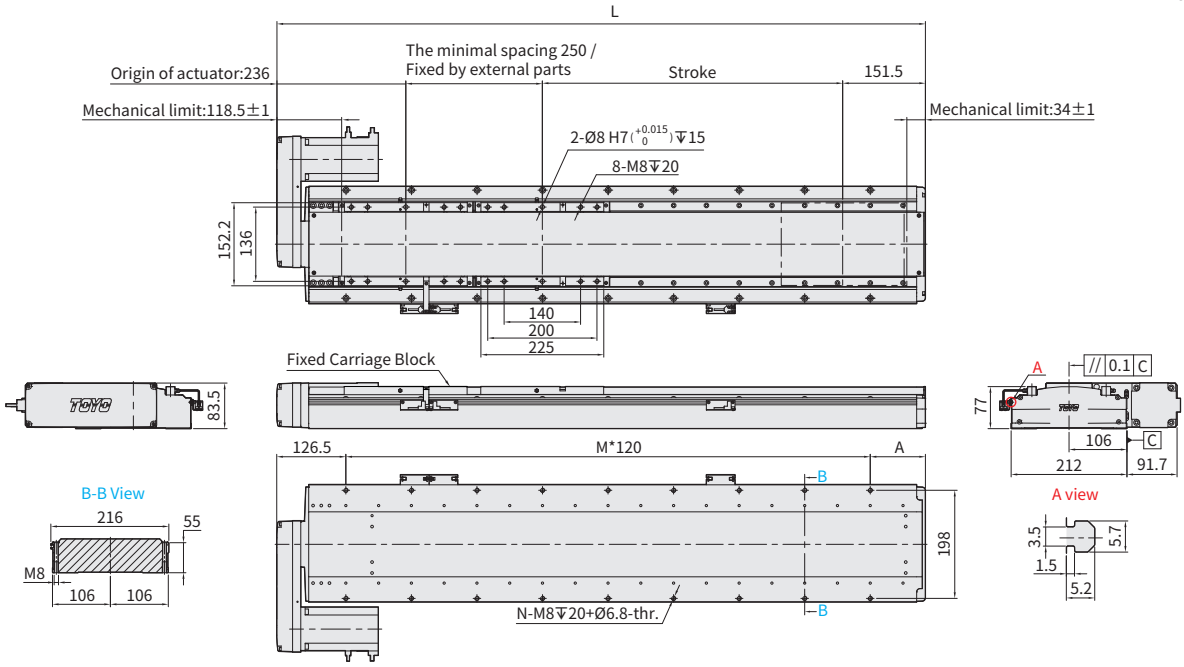

BR Motor Right Side (Sensor on the right side)

Unit : mm

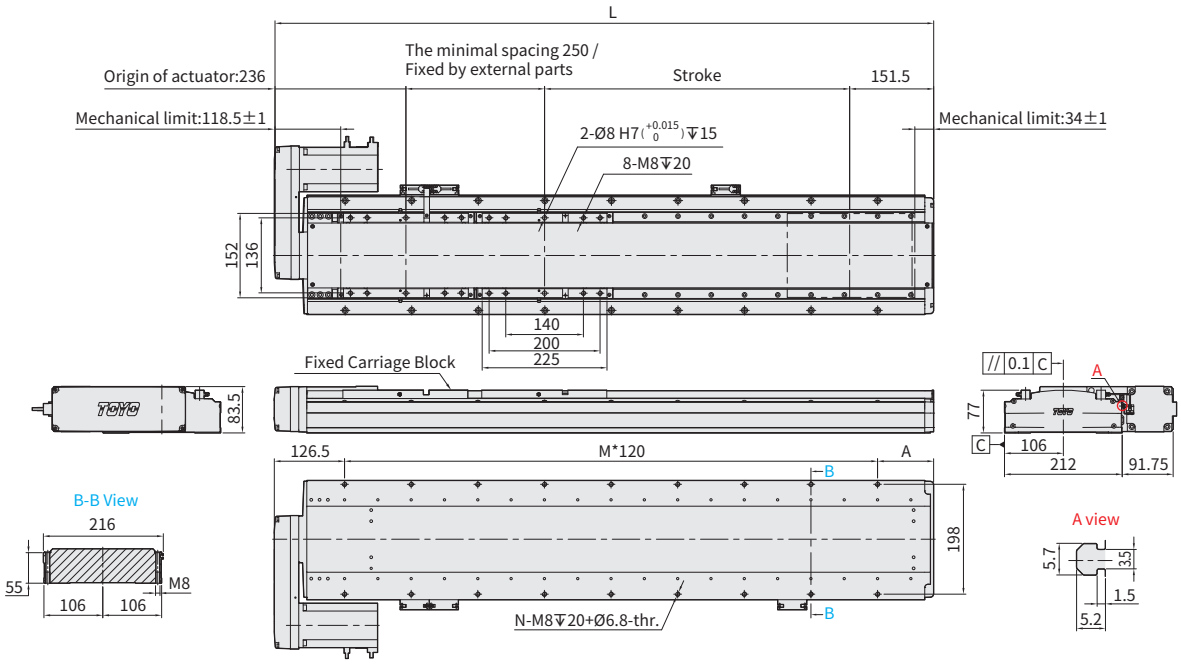

Stroke		50	100	150	200	250	300	350	400	450	500	550	600	650	700	750	800	850	900	950	1000	1050	1100	1150	1200	1250	1300	1350	1400	1450	1500	1550
Limit Stroke (±1)		60	110	160	210	260	310	360	410	460	510	560	610	660	710	760	810	860	910	960	1010	1060	1110	1160	1210	1260	1310	1360	1410	1460	1510	1560
L		687.5	737.5	787.5	837.5	887.5	937.5	987.5	1037.5	1087.5	1137.5	1187.5	1237.5	1287.5	1337.5	1387.5	1437.5	1487.5	1537.5	1587.5	1637.5	1687.5	1737.5	1787.5	1837.5	1887.5	1937.5	1987.5	2037.5	2087.5	2137.5	2187.5
A		81	131	61	111	41	91	21	71	121	51	101	31	81	131	61	111	41	91	21	71	121	51	101	31	81	131	61	111	41	91	21
M		4	5	5	5	6	6	7	7	7	8	8	9	9	10	10	10	11	11	12	12	12	13	13	14	14	15	15	15	16	16	17
N		10	12	12	12	14	14	16	16	16	18	18	20	20	22	22	22	24	24	26	26	26	28	28	30	30	32	32	32	34	34	36
KG		21.49	22.42	23.36	24.29	25.23	26.17	27.11	28.05	28.98	29.92	30.86	31.8	32.74	33.68	34.61	35.55	36.49	37.42	38.36	39.3	40.23	41.17	42.11	43.05	43.99	44.93	45.86	46.8	47.74	48.68	49.62
Linear Speed mm/s	Lead 5	300									275	250	233	208	192	175	167	150	142	133	125	117	108	100	92		83	75		67		
	Lead 10	600									550	500	467	417	383	350	333	300	283	267	250	233	217	200	183		167	150		133		
	Lead 25	1500									1375	1250	1167	1042	958	875	833	750	708	667	625	583	542	500	458		417	375		333		

免費服務專線：台灣 Toll-Free Number Taiwan 0800-800-893

2D CAD 3D CAD

• Download at www.toyorobot.com •

BM Motor Bottom Side (Sensor on the left sdie)

Unit : mm

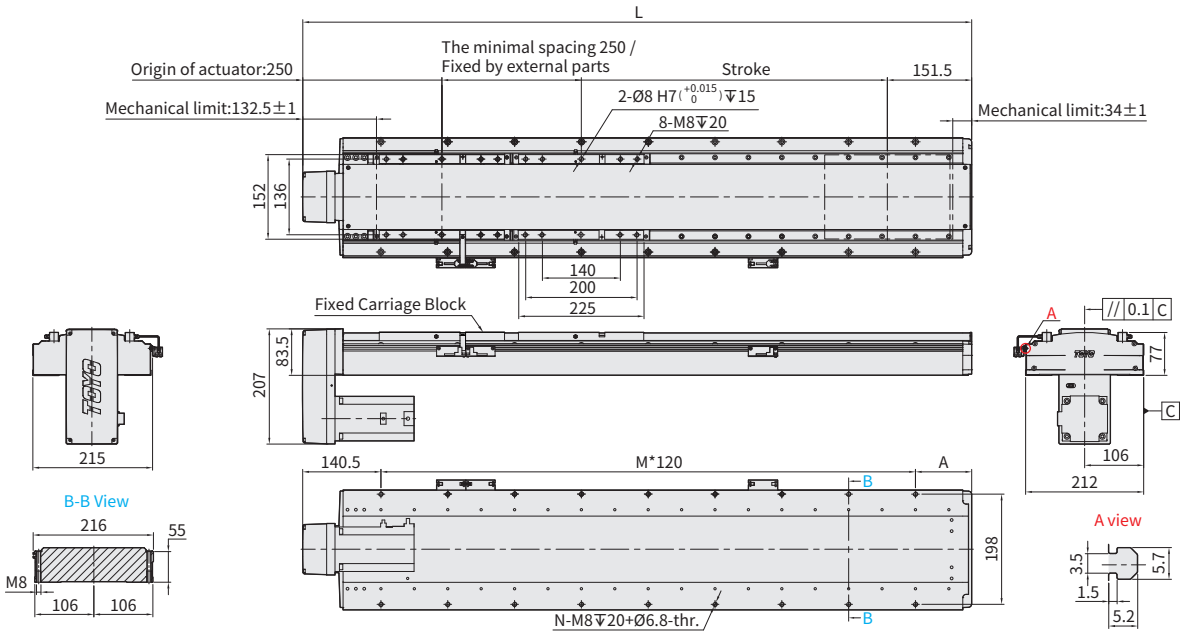

BM Motor Bottom Side (Sensor on the right side)

Unit : mm

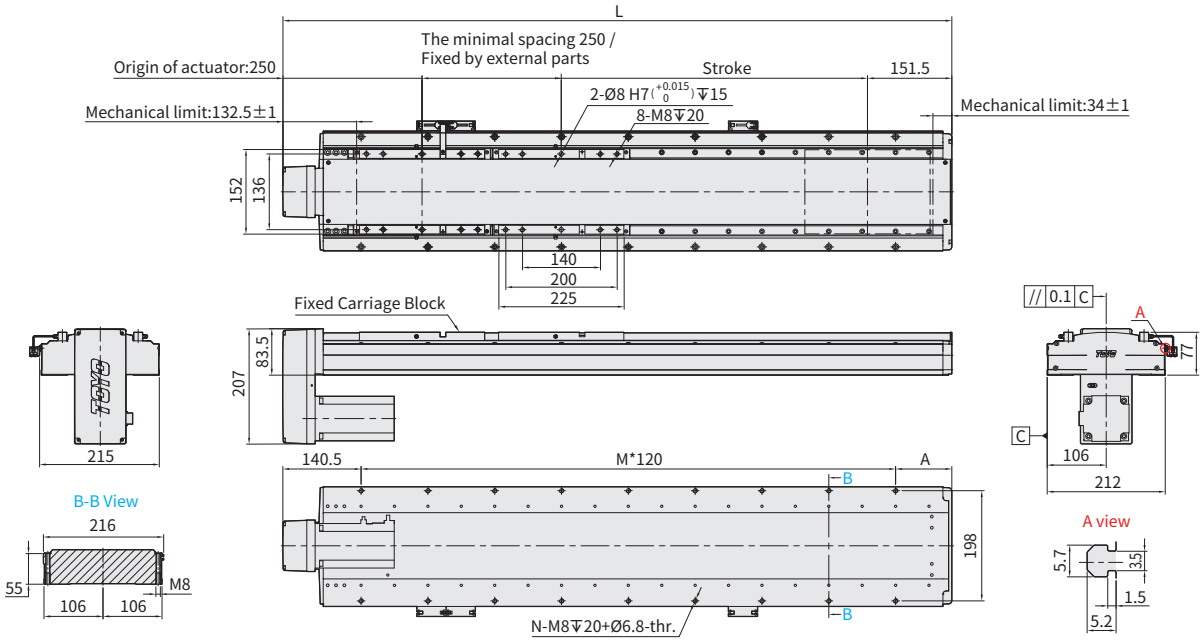

Stroke		50	100	150	200	250	300	350	400	450	500	550	600	650	700	750	800	850	900	950	1000	1050	1100	1150	1200	1250	1300	1350	1400	1450	1500	1550
Limit Stroke (±1)		60	110	160	210	260	310	360	410	460	510	560	610	660	710	760	810	860	910	960	1010	1060	1110	1160	1210	1260	1310	1360	1410	1460	1510	1560
L		701.5	751.5	801.5	851.5	901.5	951.5	1001.5	1051.5	1101.5	1151.5	1201.5	1251.5	1301.5	1351.5	1401.5	1451.5	1501.5	1551.5	1601.5	1651.5	1701.5	1751.5	1801.5	1851.5	1901.5	1951.5	2001.5	2051.5	2101.5	2151.5	2201.5
A		81	131	61	111	41	91	21	71	121	51	101	31	81	131	61	111	41	91	21	71	121	51	101	31	81	131	61	111	41	91	21
M		4	5	5	5	6	6	7	7	7	8	8	9	9	10	10	10	11	11	12	12	12	13	13	14	14	15	15	15	16	16	17
N		10	12	12	12	14	14	16	16	16	18	18	20	20	22	22	22	24	24	26	26	26	28	28	30	30	32	32	32	34	34	36
KG		21.49	22.42	23.36	24.29	25.23	26.17	27.11	28.05	28.98	29.92	30.86	31.8	32.74	33.68	34.61	35.55	36.49	37.42	38.36	39.3	40.23	41.17	42.11	43.05	43.99	44.93	45.86	46.8	47.74	48.68	49.62
Linear Speed mm/s	Lead 5	300									275	250	233	208	192	175	167	150	142	133	125	117	108	100	92		83	75		67		
	Lead 10	600									550	500	467	417	383	350	333	300	283	267	250	233	217	200	183		167	150		133		
	Lead 25	1500									1375	1250	1167	1042	958	875	833	750	708	667	625	583	542	500	458		417	375		333		

ETH2-30D 1-axis

▶ Ball Screw Drive

Max. stroke	Max. Speed	Motor Output	Ball Screw	Linear Guide
1750mm	1280mm/s	1500W	ø32mm	23X19.2-2pcs

Ordering Method

ETH2-30D - L10 - 500 - BC - T150B - C3N5L - [Refer to the right page.] - 0001

Model | Options | Customization Order No.

Stroke

50-1750mm
50 mm Pitch

Ball Screw Lead

10	10mm
20	20mm
32	32mm

Motor Position

BC	Motor Exposed
BL	Motor Left Side
BR	Motor Right Side
BM	Motor Bottom Side

Motor Brand、Power Output

M	Mitsubishi	40	-	B
P	Panasonic	75	-	
T	Delta	150	1500W	

*If No Brake,No Description.

Home Sensor

Out Side	
C	Motor Side
D	Opposite Motor Side
No Sensor	
E	No Sensor

Limit Sensor

Out Side	
3	1 Pc
4	2 Pcs
6	3 Pcs
7	4 Pcs
8	5 Pcs
9	6 Pcs
No Sensor	
5	No Sensor

*When the stroke is 50mm, Home + limit sensors is 2 maximum (only C3/D3/E3/E4/E5 can be selected)

Sensor location

L	Left side
R	Right side

Output type & Cable length

N5	NPN+5M Cable
P2	PNP+2M Cable
P5	PNP+5M Cable
-	NPN+2M Cable

Specification

Performance	Repeatability		mm	±0.005		
	Lead		mm	10	20	32
	Maximum Rotating speed		rpm	2400	2400	2400
	Maximum linear speed ※1		mm/s	400	800	1280
	Maximum Payload	Horizontal (No regenerative resistor)	kg	250	200	20
		Horizontal (External 200W regenerative resistor)	kg	-	-	105
		Vertical (No regenerative resistor)	kg	35	20	10
		Vertical (External 200W regenerative resistor)	kg	48	25	12
	Rated Thrust		N	3824	1912	1195
	Stroke (increments)		mm	50-1750mm/(50 increments)		
	Maximum acceleration		G	0.20	0.41	0.65
	Ball screw	Basic dynamic load rating Ca	N	47137	18708	18031
		Basic static load rating Coa	N	119760	53778	52277
	Linear Guide	Dynamic horizontal (100km)	N	137988		
		Static Horizontal	N	288123		
	Fixed bearing	Basic dynamic load rating Cr	N	25017		
		Static load rating Cor	N	18940		
Parts	AC Servo Motor Output		W	1500		
	Ball Screw Ø		mm	C7Ø32		
	High Rigidity Linear Guide		mm	W23XH19.2		
	Coupling		mm	24X22		
	Home Sensor	Outside		T64N2(NPN)		

※1 During in a long stroke, it causes ballscrew deflection, the speed must reduce. (Please refer to the linear velocity from the data sheet below the dimension graph.)

Allowable Overhang

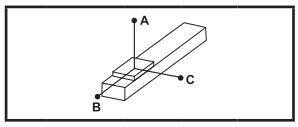

(Unit : mm)

Horizontal Installation		A	B	C
Lead 10	100kg	19379	1801	726
	200kg	9092	785	316
	250kg	7020	581	234
Lead 20	50kg	13392	3252	1271
	100kg	6409	1510	590
	200kg	2907	640	250
Lead 32	20kg	14030	6485	2376
	50kg	5399	2456	900
	105kg	2382	1048	384

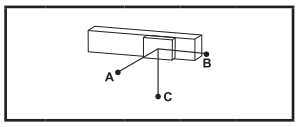

(Unit : mm)

Wall Installation		A	B	C
Lead 10	100kg	726	1801	19379
	200kg	316	785	9092
	250kg	234	581	7020
Lead 20	50kg	1271	3252	13392
	100kg	590	1510	6409
	200kg	250	640	2907
Lead 32	20kg	2376	6485	14030
	50kg	900	2456	5399
	105kg	384	1048	2382

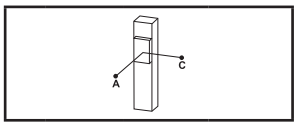

(Unit : mm)

Vertical Installation		A	C
Lead 10	25kg	7680	7680
	35kg	5485	5485
	48kg	4000	4000
Lead 20	20kg	7682	7682
	25kg	6145	6145
	-	-	-
Lead 32	10kg	1063	10635
	12kg	8862	8862
	-	-	-

Static Loading Moment

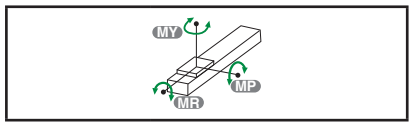

(Unit : N.m)

MY	6902
MP	6902
MR	4664

* The data represented by the moment table is the center of gravity of the load.The length of the overhang is allowed in a single direction.
*Operation life is 10,000km when the product is using under the specified conditions.
*Data information is not for ceiling-mount inverse use.
Contact us for the details if you want to apply ceiling-mount inverse usage.
*The life and torque are calculated by setting the motor acceleration and deceleration for 0.2 seconds.

Options

P – MM – CMK

Standard PIN hole

Code	Instructions	Refer to
P	Standard PIN hole	P.677

Selectable Cable Leading Direction

Code	Instructions	Refer to
MW	Upper side	P.679 ~ P.680
MM	Bottom side	
ML	Left side	
MR	Right side	

Additional keyway for motor drive parts

Code	Instructions			Refer to
	Keyway Groove	Motor Position	Shipment Type	
CMK	Single (Limited to the motor side)	BC/M	Keyway Coupling	P.681 ~ P.682
		BL/BR/BM	Keyway Belt Pulley	
SKY	Double	BC/M	Keyway Coupling	
		BL/BR/BM	Keyway Belt Pulley	
SKN	Double	BC/M	Without Coupling (Please purchase and install by yourself)	
		BL/BR/BM	Without Belt Pulley (Please purchase and install by yourself)	

2D CAD 3D CAD • Download at www.toyorobot.com •

BC Motor Exposed (Sensor on the left sdie)

Unit : mm

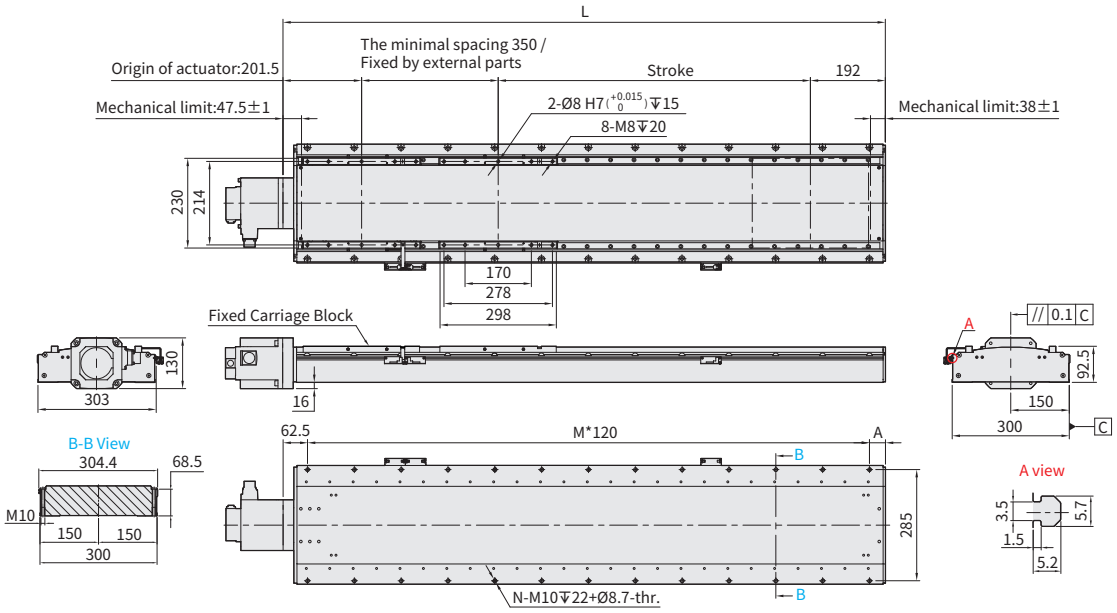

BC Motor Exposed (Sensor on the right side)

Unit : mm

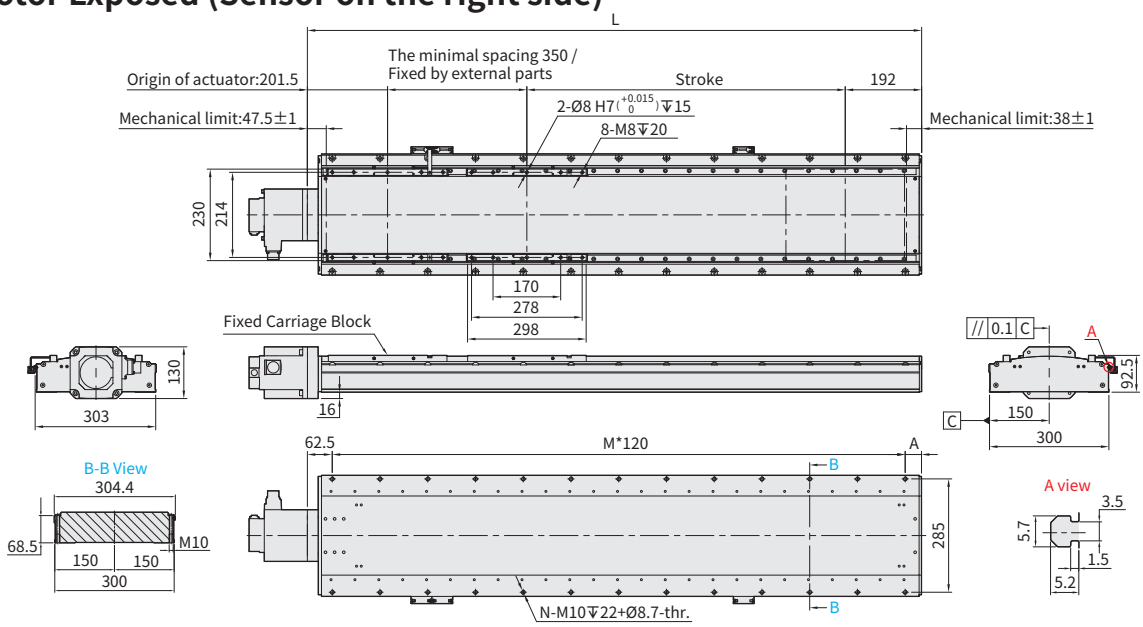

Stroke		50	100	150	200	250	300	350	400	450	500	550	600	650	700	750	800	850	900	950
Limit Stroke (±1)		60	110	160	210	260	310	360	410	460	510	560	610	660	710	760	810	860	910	960
L		793.5	843.5	893.5	943.5	993.5	1043.5	1093.5	1143.5	1193.5	1243.5	1293.5	1343.5	1393.5	1443.5	1493.5	1543.5	1593.5	1643.5	1693.5
A		131	61	111	41	91	21	71	121	51	101	31	81	131	61	111	41	91	21	71
M		5	6	6	7	7	8	8	8	9	9	10	10	10	11	11	12	12	13	13
N		12	14	14	16	16	18	18	18	20	20	22	22	22	24	24	26	26	28	28
KG		41.08	42.62	44.18	45.73	47.29	48.85	50.41	51.95	53.51	55.06	56.62	58.18	59.73	61.28	62.83	64.39	65.95	67.5	69.06
Linear Speed mm/s	Lead 10	400																		
	Lead 20	800																		
	Lead 32	1280																		

Stroke		1000	1050	1100	1150	1200	1250	1300	1350	1400	1450	1500	1550	1600	1650	1700	1750
Limit Stroke (±1)		1010	1060	1110	1160	1210	1260	1310	1360	1410	1460	1510	1560	1610	1660	1710	1760
L		1743.5	1793.5	1843.5	1893.5	1943.5	1993.5	2043.5	2093.5	2143.5	2193.5	2243.5	2293.5	2343.5	2393.5	2443.5	2493.5
A		121	51	101	31	81	131	61	111	41	91	21	71	121	51	101	31
M		13	14	14	15	15	15	16	16	17	17	18	18	18	19	19	20
N		28	30	30	32	32	32	34	34	36	36	38	38	38	40	40	42
KG		70.6	72.16	73.72	75.28	76.83	78.39	79.93	81.49	83.05	84.6	86.16	87.72	89.26	90.82	92.37	93.93
Linear Speed mm/s	Lead 10	383	367	333	317	300	283	267	250		233	217		200	183		167
	Lead 20	767	733	667	633	600	567	533	500		467	433		400	367		333
	Lead 32	1227	1173	1067	1013	960	907	853	800		747	693		640	587		533

免費服務專線：台灣 Toll-Free Number Taiwan 0800-800-893

2D CAD 3D CAD • Download at www.toyorobot.com •

BL Motor Left Side (Sensor on the left sdie)

Unit : mm

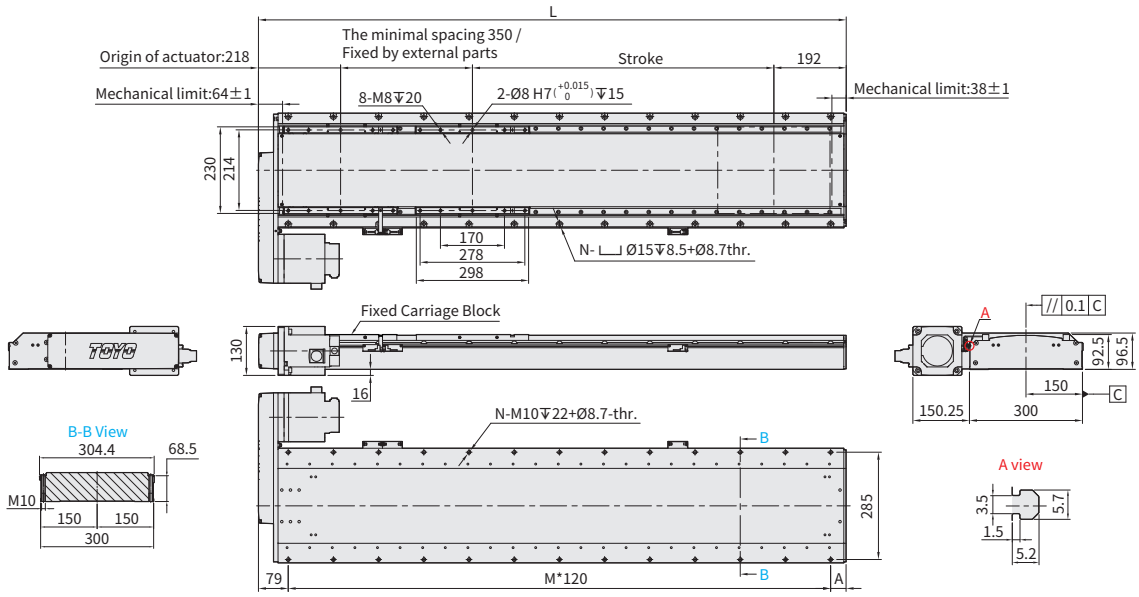

BL Motor Left Side (Sensor on the right side)

Unit : mm

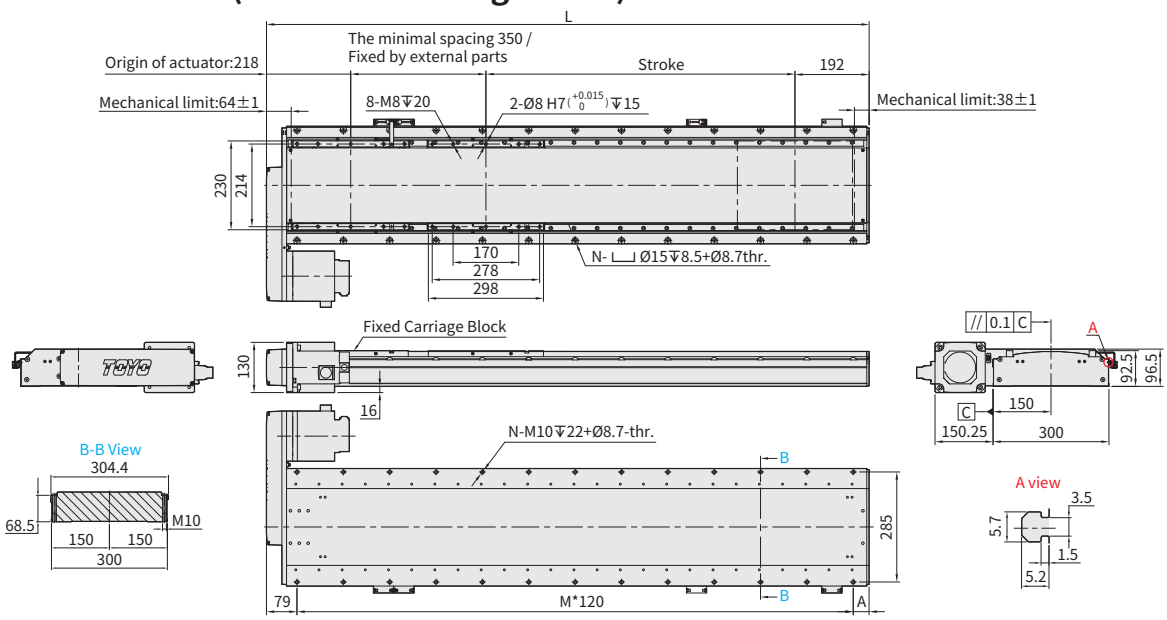

Stroke		50	100	150	200	250	300	350	400	450	500	550	600	650	700	750	800	850	900	950
Limit Stroke (±1)		60	110	160	210	260	310	360	410	460	510	560	610	660	710	760	810	860	910	960
L		810	860	910	960	1010	1060	1110	1160	1210	1260	1310	1360	1410	1460	1510	1560	1610	1660	1710
A		131	61	111	41	91	21	71	121	51	101	31	81	131	61	111	41	91	21	71
M		5	6	6	7	7	8	8	8	9	9	10	10	10	11	11	12	12	13	13
N		12	14	14	16	16	18	18	18	20	20	22	22	22	24	24	26	26	28	28
KG		43.4	44.95	46.5	48.06	49.62	51.18	52.73	54.28	55.83	57.39	58.95	60.5	62.06	63.6	65.16	66.72	68.27	69.83	71.39
Linear Speed mm/s	Lead 10	400																		
	Lead 20	800																		
	Lead 32	1280																		

Stroke		1000	1050	1100	1150	1200	1250	1300	1350	1400	1450	1500	1550	1600	1650	1700	1750
Limit Stroke (±1)		1010	1060	1110	1160	1210	1260	1310	1360	1410	1460	1510	1560	1610	1660	1710	1760
L		1760	1810	1860	1910	1960	2010	2060	2110	2160	2210	2260	2310	2360	2410	2460	2510
A		121	51	101	31	81	131	61	111	41	91	21	71	121	51	101	31
M		13	14	14	15	15	15	16	16	17	17	18	18	18	19	19	20
N		28	30	30	32	32	32	34	34	36	36	38	38	38	40	40	42
KG		72.93	74.49	76.05	77.6	79.16	80.72	82.26	83.82	85.37	86.93	88.49	90.04	91.59	93.14	94.7	96.26
Linear Speed mm/s	Lead 10	383	367	333	317	300	283	267	250		233	217		200	183		167
	Lead 20	767	733	667	633	600	567	533	500		467	433		400	367		333
	Lead 32	1227	1173	1067	1013	960	907	853	800		747	693		640	587		533

ETH2-30D 1-axis

▶ Ball Screw Drive

2D CAD 3D CAD • Download at www.toyorobot.com •

BR Motor Right Side (Sensor on the left sdie)

Unit : mm

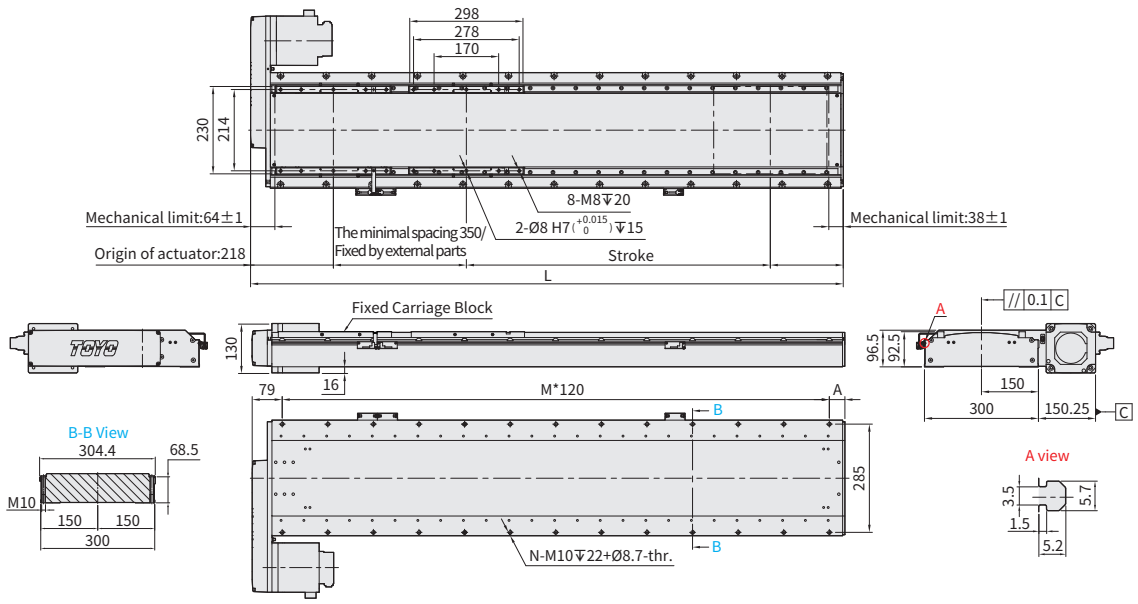

BR Motor Right Side (Sensor on the right side)

Unit : mm

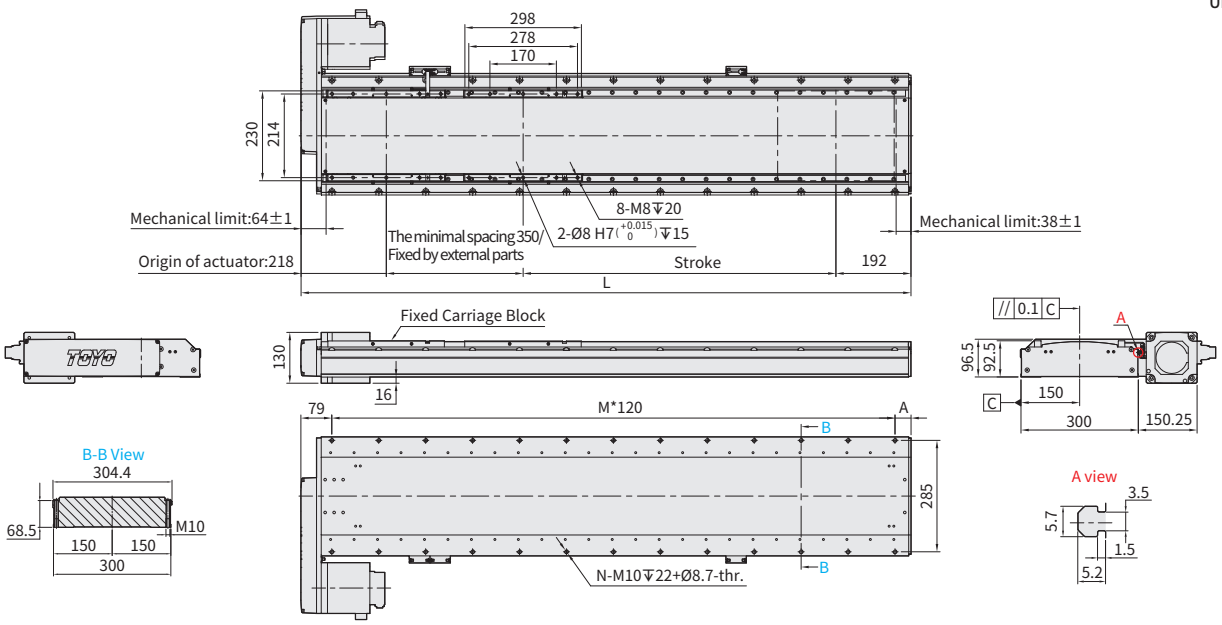

Stroke		50	100	150	200	250	300	350	400	450	500	550	600	650	700	750	800	850	900	950
Limit Stroke (±1)		60	110	160	210	260	310	360	410	460	510	560	610	660	710	760	810	860	910	960
L		810	860	910	960	1010	1060	1110	1160	1210	1260	1310	1360	1410	1460	1510	1560	1610	1660	1710
A		131	61	111	41	91	21	71	121	51	101	31	81	131	61	111	41	91	21	71
M		5	6	6	7	7	8	8	8	9	9	10	10	10	11	11	12	12	13	13
N		12	14	14	16	16	18	18	18	20	20	22	22	22	24	24	26	26	28	28
KG		43.4	44.95	46.5	48.06	49.62	51.18	52.73	54.28	55.83	57.39	58.95	60.5	62.06	63.6	65.16	66.72	68.27	69.83	71.39
Linear Speed mm/s	Lead 10	400																		
	Lead 20	800																		
	Lead 32	1280																		

Stroke		1000	1050	1100	1150	1200	1250	1300	1350	1400	1450	1500	1550	1600	1650	1700	1750
Limit Stroke (±1)		1010	1060	1110	1160	1210	1260	1310	1360	1410	1460	1510	1560	1610	1660	1710	1760
L		1760	1810	1860	1910	1960	2010	2060	2110	2160	2210	2260	2310	2360	2410	2460	2510
A		121	51	101	31	81	131	61	111	41	91	21	71	121	51	101	31
M		13	14	14	15	15	15	16	16	17	17	18	18	18	19	19	20
N		28	30	30	32	32	32	34	34	36	36	38	38	38	40	40	42
KG		72.93	74.49	76.05	77.6	79.16	80.72	82.26	83.82	85.37	86.93	88.49	90.04	91.59	93.14	94.7	96.26
Linear Speed mm/s	Lead 10	383	367	333	317	300	283	267	250		233	217		200	183		167
	Lead 20	767	733	667	633	600	567	533	500		467	433		400	367		333
	Lead 32	1227	1173	1067	1013	960	907	853	800		747	693		640	587		533

免費服務專線：台灣 Toll-Free Number Taiwan 0800-800-893

2D CAD 3D CAD • Download at www.toyorobot.com •

BM Motor Bottom Side (Sensor on the left sdie)

Unit : mm

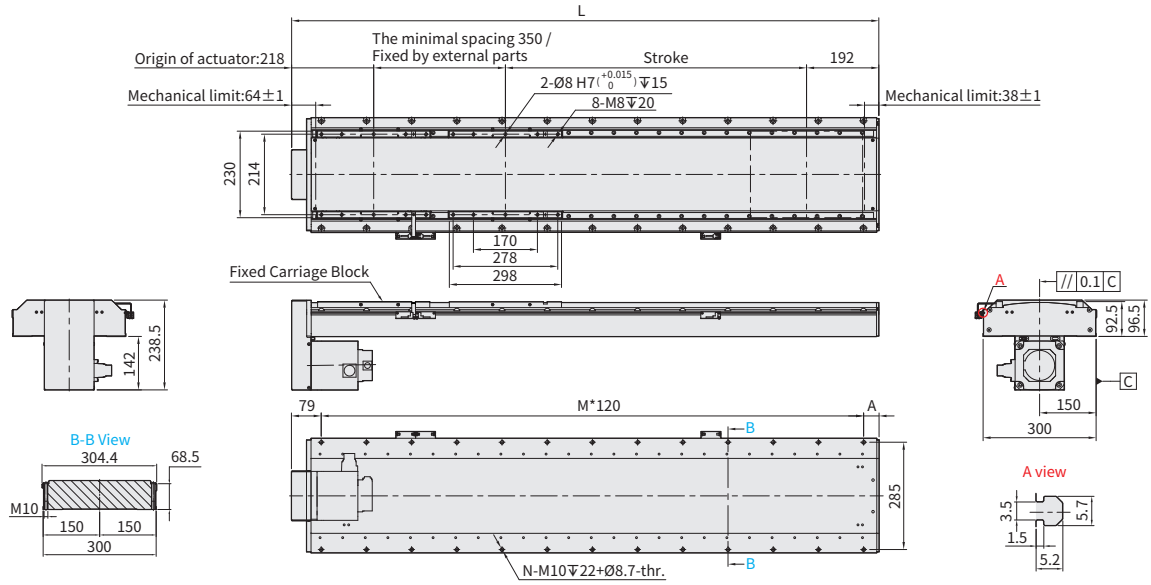

BM Motor Bottom Side (Sensor on the right side)

Unit : mm

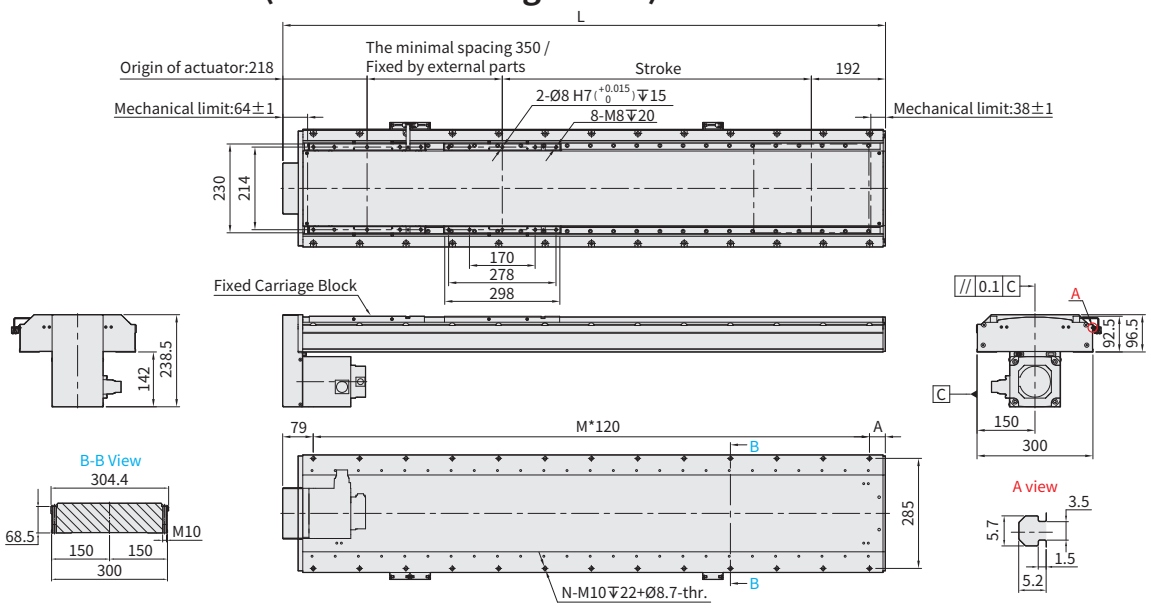

Stroke		50	100	150	200	250	300	350	400	450	500	550	600	650	700	750	800	850	900	950
Limit Stroke (±1)		60	110	160	210	260	310	360	410	460	510	560	610	660	710	760	810	860	910	960
L		810	860	910	960	1010	1060	1110	1160	1210	1260	1310	1360	1410	1460	1510	1560	1610	1660	1710
A		131	61	111	41	91	21	71	121	51	101	31	81	131	61	111	41	91	21	71
M		5	6	6	7	7	8	8	8	9	9	10	10	10	11	11	12	12	13	13
N		12	14	14	16	16	18	18	18	20	20	22	22	22	24	24	26	26	28	28
KG		42.32	43.86	45.42	46.97	48.53	50.09	51.64	53.19	54.74	56.3	57.86	59.41	60.97	62.51	64.07	65.63	67.19	68.74	70.3
Linear Speed mm/s	Lead 10	400																		
	Lead 20	800																		
	Lead 32	1280																		

Stroke		1000	1050	1100	1150	1200	1250	1300	1350	1400	1450	1500	1550	1600	1650	1700	1750
Limit Stroke (±1)		1010	1060	1110	1160	1210	1260	1310	1360	1410	1460	1510	1560	1610	1660	1710	1760
L		1760	1810	1860	1910	1960	2010	2060	2110	2160	2210	2260	2310	2360	2410	2460	2510
A		121	51	101	31	81	131	61	111	41	91	21	71	121	51	101	31
M		13	14	14	15	15	15	16	16	17	17	18	18	18	19	19	20
N		28	30	30	32	32	32	34	34	36	36	38	38	38	40	40	42
KG		71.84	73.4	74.96	76.51	78.07	79.63	81.17	82.73	84.28	85.84	87.4	88.96	90.5	92.06	93.61	95.17
Linear Speed mm/s	Lead 10	383	367	333	317	300	283	267	250		233	217		200	183		167
	Lead 20	767	733	667	633	600	567	533	500		467	433		400	367		333
	Lead 32	1227	1173	1067	1013	960	907	853	800		747	693		640	587		533

ETH2-30D 1-axis

Ball Screw Drive

Max. stroke	Max. Speed	Motor Output	Ball Screw	Linear Guide
1750mm	640mm/s	750W	ø32mm	23X19.2-2pcs

Ordering Method

ETH2-30D-L10-500-BC-M75B-C3N5L-03-[Refer to the right page.]-0001

Model | Options | Customization Order No.

Stroke

50-1750mm
50 mm Pitch

Sensor location

L	Left side
R	Right side

Slide

3	3:1
5	5:1

Ball Screw Lead

10	10mm
20	20mm
32	32mm

Motor Position

BC	Motor Exposed
BL	Motor Left Side
BR	Motor Right Side
BM	Motor Bottom Side

Motor Brand、Power Output

M	Mitsubishi	10	-	B
P	Panasonic	20	-	
Y	Yaskawa	40	-	
T	Delta	75	750W	

*If No Brake,No Description.

Home Sensor

Out Side	
C	Motor Side
D	Opposite Motor Side
No Sensor	
E	No Sensor

Limit Sensor

Out Side	
3	1 Pc
4	2 Pcs
6	3 Pcs
7	4 Pcs
8	5 Pcs
9	6 Pcs
No Sensor	
5	No Sensor

*When the stroke is 50mm, Home + limit sensors is 2 maximum (only C3/D3/E3/E4/E5 can be selected)

Output type & Cable length

N5	NPN+5M Cable
P2	PNP+2M Cable
P5	PNP+5M Cable
-	NPN+2M Cable

Specification

Performance	Repeatability		mm	±0.005					
	Lead		mm	10		20		32	
	Reduce Ratio			3:1	5:1	3:1	5:1	3:1	5:1
	Maximum Rotating speed		rpm	3600		3600		3600	
	Maximum linear speed ※1		mm/s	200	120	400	240	640	384
	Maximum Payload	Horizontal	kg	400	400	300	300	180	180
		Vertical (No regenerative resistor)	kg	110	155	55	75	20	38
		Vertical (External 200W regenerative resistor)	kg	130	200	65	110	38	60
	Rated Thrust		N	3829	6382	1915	3191	1197	1994
	Stroke (increments)		mm	50-1750mm/(50 increments)					
	Maximum acceleration		G	0.10	0.06	0.20	0.12	0.33	0.20
	Ball screw	Basic dynamic load rating Ca	N	47137		18708		18031	
		Basic static load rating Coa	N	119760		53778		52277	
	Linear Guide	Dynamic horizontal (100km)	N	137988					
		Static Horizontal	N	288123					
	Fixed bearing	Basic dynamic load rating Cr	N	25017					
		Static load rating Cor	N	18940					
Parts	AC Servo Motor Output		W	750					
	Ball Screw Ø		mm	C7Ø32					
	High Rigidity Linear Guide		mm	W23XH19.2					
	Coupling		mm	22X22					
	Home Sensor	Outside		T64N2(NPN)					

※1 During in a long stroke, it causes ballscrew deflection, the speed must reduce. (Please refer to the linear velocity from the data sheet below the dimension graph.)

Allowable Overhang

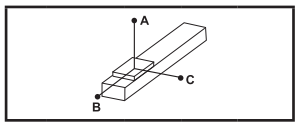

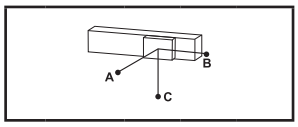

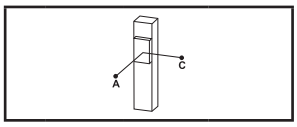

(Unit : mm)

Horizontal Installation		A	B	C
Lead 10	200kg	33490	930	378
	300kg	21427	543	220
	400kg	15288	349	142
Lead 20	100kg	23750	1801	729
	200kg	11269	785	318
	300kg	7062	446	180
Lead 32	80kg	14405	2078	834
	130kg	8583	1190	477
	180kg	5988	795	319

(Unit : mm)

Wall Installation		A	B	C
Lead 10	200kg	378	930	33490
	300kg	220	543	21427
	400kg	142	349	15288
Lead 20	100kg	729	1801	23750
	200kg	318	785	11269
	300kg	180	446	7062
Lead 32	80kg	834	2078	14405
	130kg	477	1190	8583
	180kg	319	795	5988

(Unit : mm)

Vertical Installation		A	C
Lead 10	110kg	2077	2077
	155kg	1474	1474
	200kg	1142	1142
Lead 20	55kg	3575	3575
	75kg	2621	2621
	110kg	1787	1787
Lead 32	20kg	8725	8725
	38kg	4592	4592
	60kg	2908	2908

Static Loading Moment

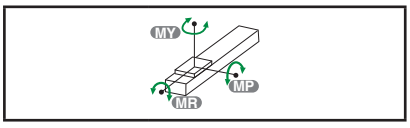

(Unit : N.m)

MY	6902
MP	6902
MR	4664

* The data represented by the moment table is the center of gravity of the load.The length of the overhang is allowed in a single direction.
*Operation life is 10,000km when the product is using under the specified conditions.
*Data information is not for ceiling-mount inverse use.
Contact us for the details if you want to apply ceiling-mount inverse usage.
*The life and torque are calculated by setting the motor acceleration and deceleration for 0.2 seconds.

Options

P - MM - CMK

Standard PIN hole

Code	Instructions	Refer to
P	Standard PIN hole	P.677

Selectable Cable Leading Direction

Code	Instructions	Refer to
MW	Upper side	P.679 ~ P.680
MM	Bottom side	
ML	Left side	
MR	Right side	

Additional keyway for motor drive parts

Code	Instructions			Refer to
	Keyway Groove	Motor Position	Shipment Type	
CMK	Single (Limited to the motor side)	BC/M	Keyway Coupling	P.681 ~ P.682
		BL/BR/BM	Keyway Belt Pulley	
SKY	Double	BC/M	Keyway Coupling	
		BL/BR/BM	Keyway Belt Pulley	
SKN	Double	BC/M	Without Coupling (Please purchase and install by yourself)	
		BL/BR/BM	Without Belt Pulley (Please purchase and install by yourself)	

2D CAD 3D CAD • Download at www.toyorobot.com •

BC Motor Exposed (Sensor on the left sdie)

Unit : mm

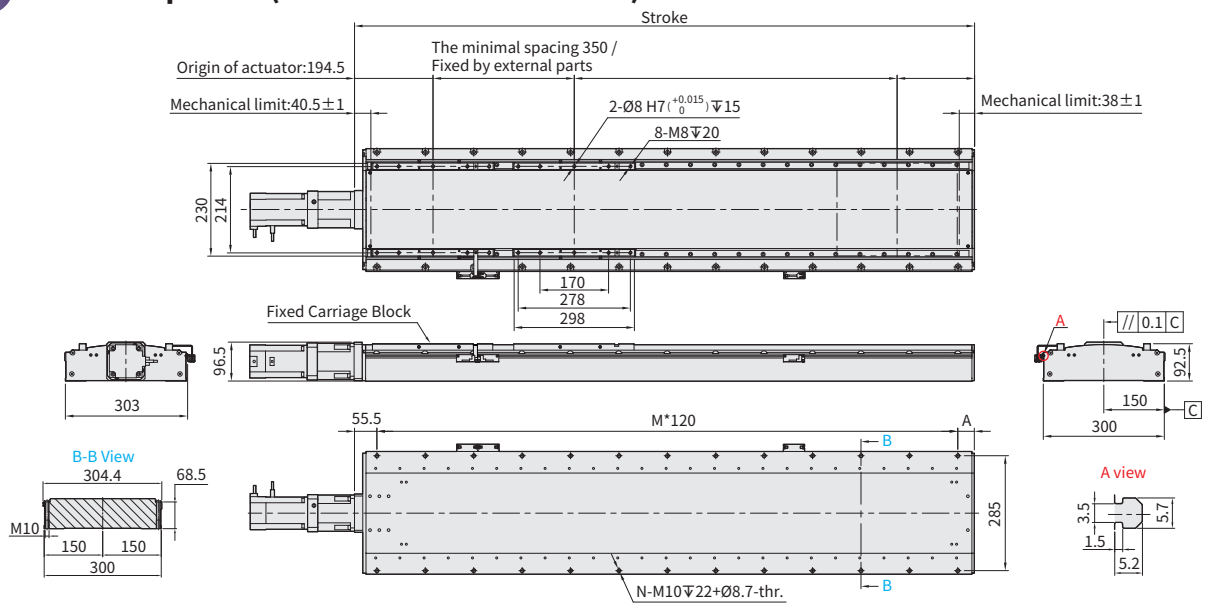

BC Motor Exposed (Sensor on the right side)

Unit : mm

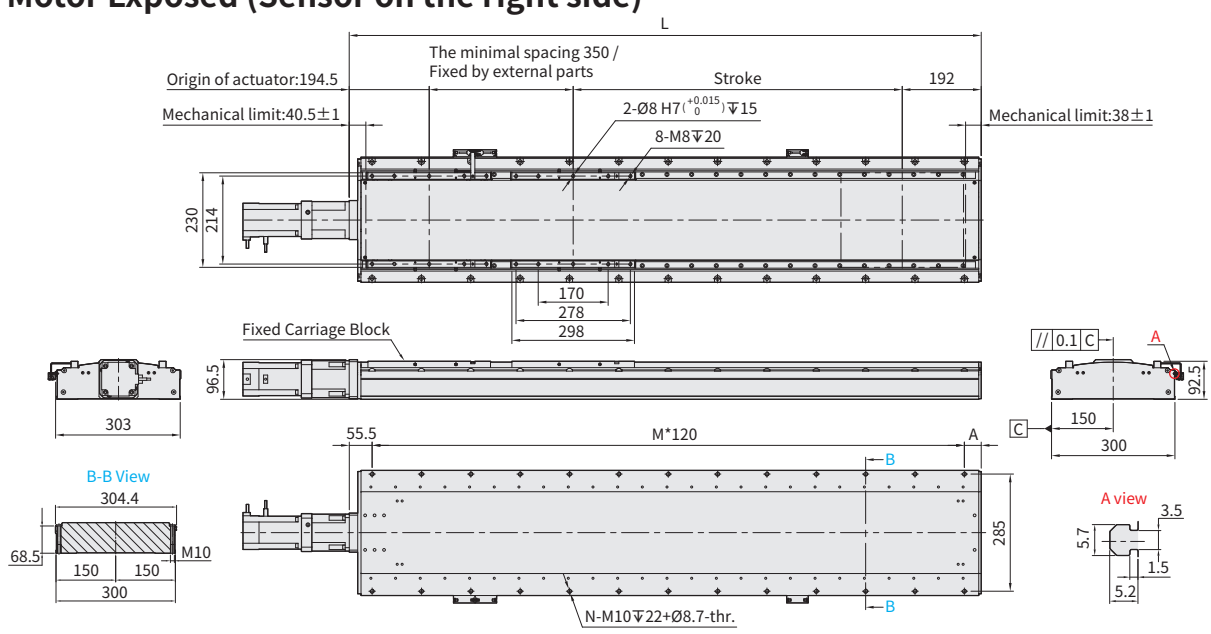

Stroke		50	100	150	200	250	300	350	400	450	500	550	600	650	700	750	800	850	900	950	1000	1050	1100	1150	1200
Limit Stroke (±1)		60	110	160	210	260	310	360	410	460	510	560	610	660	710	760	810	860	910	960	1010	1060	1110	1160	1210
L		786.5	836.5	886.5	936.5	986.5	1036.5	1086.5	1136.5	1186.5	1236.5	1286.5	1336.5	1386.5	1436.5	1486.5	1536.5	1586.5	1636.5	1686.5	1736.5	1786.5	1836.5	1886.5	1936.5
A		131	61	111	41	91	21	71	121	51	101	31	81	131	61	111	41	91	21	71	121	51	101	31	81
M		5	6	6	7	7	8	8	8	9	9	10	10	10	11	11	12	12	13	13	13	14	14	15	15
N		12	14	14	16	16	18	18	18	20	20	22	22	22	24	24	26	26	28	28	28	30	30	32	32
KG		44.18	45.73	47.28	48.84	50.4	51.95	53.5	55.05	56.61	58.17	59.73	61.28	62.84	64.38	65.94	67.5	69.05	70.61	72.17	73.71	75.27	76.82	78.38	79.94
Linear Speed mm/s	Lead 10	200 Reduce Ratio 3:1 / 120 Reduce Ratio 5:1																							
	Lead 20	400 Reduce Ratio 3:1 / 240 Reduce Ratio 5:1																							
	Lead 32	640 Reduce Ratio 3:1 / 384 Reduce Ratio 5:1																							

Stroke		1250	1300	1350	1400	1450	1500	1550	1600	1650	1700	1750
Limit Stroke (±1)		1260	1310	1360	1410	1460	1510	1560	1610	1660	1710	1760
L		1986.5	2036.5	2086.5	2136.5	2186.5	2236.5	2286.5	2336.5	2386.5	2436.5	2486.5
A		131	61	111	41	91	21	71	121	51	101	31
M		15	16	16	17	17	18	18	18	19	19	20
N		32	34	34	36	36	38	38	38	40	40	42
KG		81.5	83.04	84.6	86.15	87.71	89.27	90.82	92.37	93.92	95.48	97.04
Linear Speed mm/s	Lead 10	200 Reduce Ratio 3:1 / 120 Reduce Ratio 5:1								183 Reduce Ratio 3:1 / 120 Reduce Ratio 5:1		167 Reduce Ratio 3:1 / 120 Reduce Ratio 5:1
	Lead 20	400 Reduce Ratio 3:1 / 240 Reduce Ratio 5:1								367 Reduce Ratio 3:1 / 240 Reduce Ratio 5:1		333 Reduce Ratio 3:1 / 240 Reduce Ratio 5:1
	Lead 32	640 Reduce Ratio 3:1 / 384 Reduce Ratio 5:1								587 Reduce Ratio 3:1 / 384 Reduce Ratio 5:1		533 Reduce Ratio 3:1 / 120 Reduce Ratio 5:1

免費服務專線：台灣 Toll-Free Number Taiwan 0800-800-893

2D CAD 3D CAD • Download at www.toyorobot.com •

BL Motor Left Side (Sensor on the left sdie)

Unit : mm

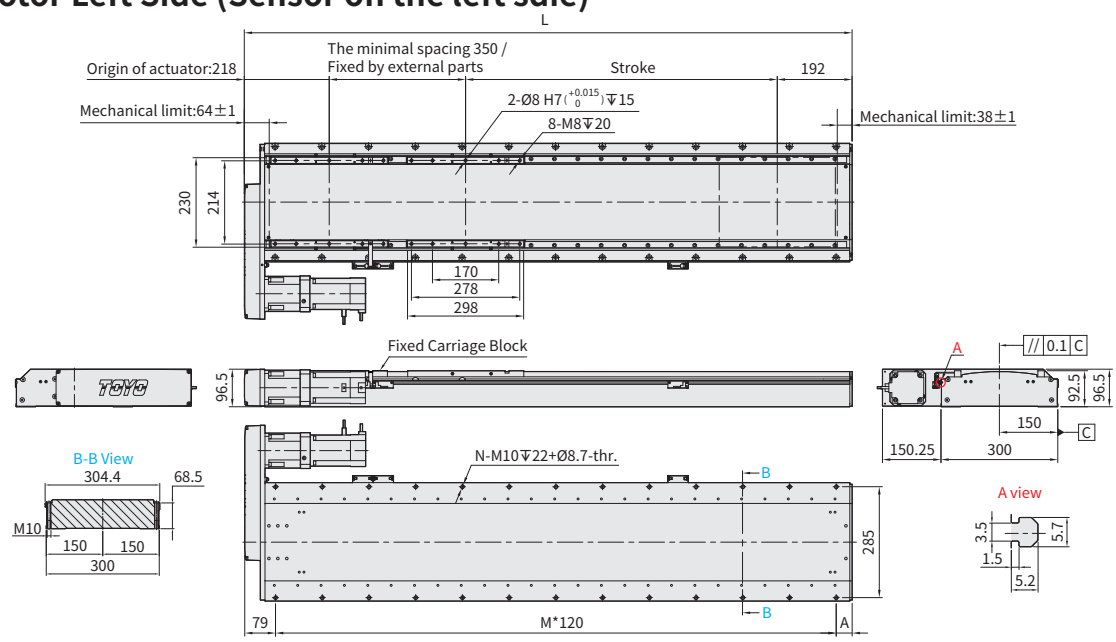

BL Motor Left Side (Sensor on the right side)

Unit : mm

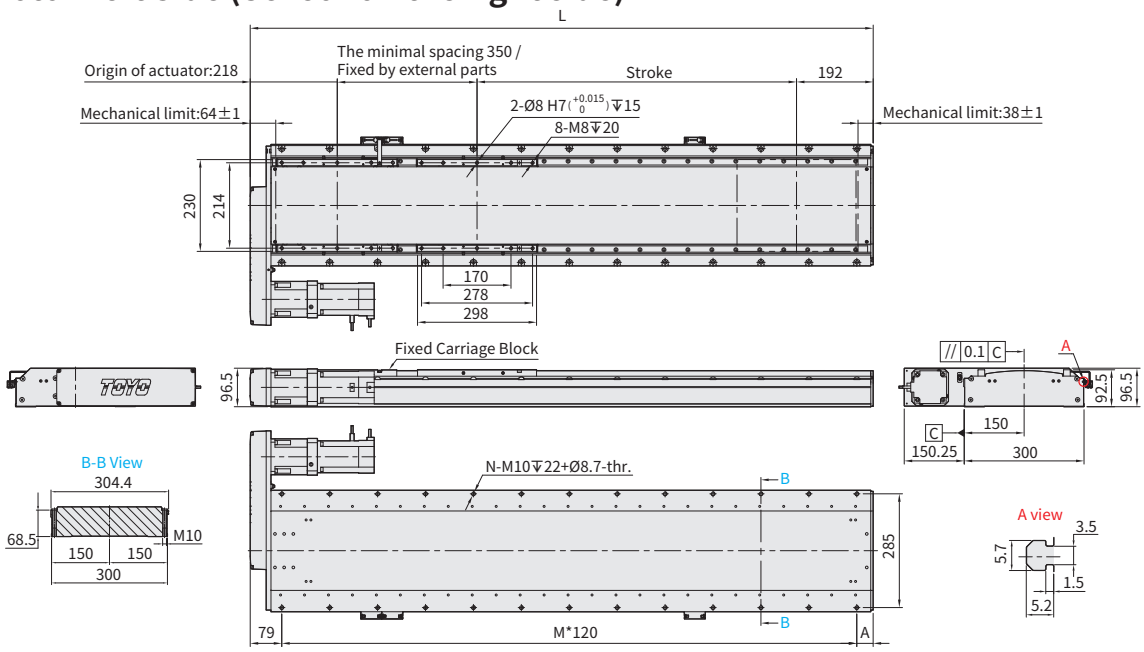

Stroke		50	100	150	200	250	300	350	400	450	500	550	600	650	700	750	800	850	900	950	1000	1050	1100	1150	1200
Limit Stroke (±1)		60	110	160	210	260	310	360	410	460	510	560	610	660	710	760	810	860	910	960	1010	1060	1110	1160	1210
L		810	860	910	960	1010	1060	1110	1160	1210	1260	1310	1360	1410	1460	1510	1560	1610	1660	1710	1760	1810	1860	1910	1960
A		131	61	111	41	91	21	71	121	51	101	31	81	131	61	111	41	91	21	71	121	51	101	31	81
M		5	6	6	7	7	8	8	8	9	9	10	10	10	11	11	12	12	13	13	13	14	14	15	15
N		12	14	14	16	16	18	18	18	20	20	22	22	22	24	24	26	26	28	28	28	30	30	32	32
KG		46.62	48.16	49.72	51.28	52.83	54.39	55.95	57.49	59.05	60.61	62.16	63.72	65.28	66.82	68.38	69.93	71.49	73.05	74.6	76.15	77.7	79.26	80.82	82.38
Linear Speed mm/s	Lead 10	200 Reduce Ratio 3:1 / 120 Reduce Ratio 5:1																							
	Lead 20	400 Reduce Ratio 3:1 / 240 Reduce Ratio 5:1																							
	Lead 32	640 Reduce Ratio 3:1 / 384 Reduce Ratio 5:1																							

Stroke		1250	1300	1350	1400	1450	1500	1550	1600	1650	1700	1750
Limit Stroke (±1)		1260	1310	1360	1410	1460	1510	1560	1610	1660	1710	1760
L		2010	2060	2110	2160	2210	2260	2310	2360	2410	2460	2510
A		131	61	111	41	91	21	71	121	51	101	31
M		15	16	16	17	17	18	18	18	19	19	20
N		32	34	34	36	36	38	38	38	40	40	42
KG		83.93	85.48	87.03	88.59	90.15	91.7	93.26	94.8	96.36	97.92	99.47
Linear Speed mm/s	Lead 10	200 Reduce Ratio 3:1 / 120 Reduce Ratio 5:1								183 Reduce Ratio 3:1 / 120 Reduce Ratio 5:1		167 Reduce Ratio 3:1 / 120 Reduce Ratio 5:1
	Lead 20	400 Reduce Ratio 3:1 / 240 Reduce Ratio 5:1								367 Reduce Ratio 3:1 / 240 Reduce Ratio 5:1		333 Reduce Ratio 3:1 / 240 Reduce Ratio 5:1
	Lead 32	640 Reduce Ratio 3:1 / 384 Reduce Ratio 5:1								587 Reduce Ratio 3:1 / 384 Reduce Ratio 5:1		533 Reduce Ratio 3:1 / 120 Reduce Ratio 5:1

2D CAD 3D CAD • Download at www.toyorobot.com •

BR Motor Right Side (Sensor on the left sdie)

Unit : mm

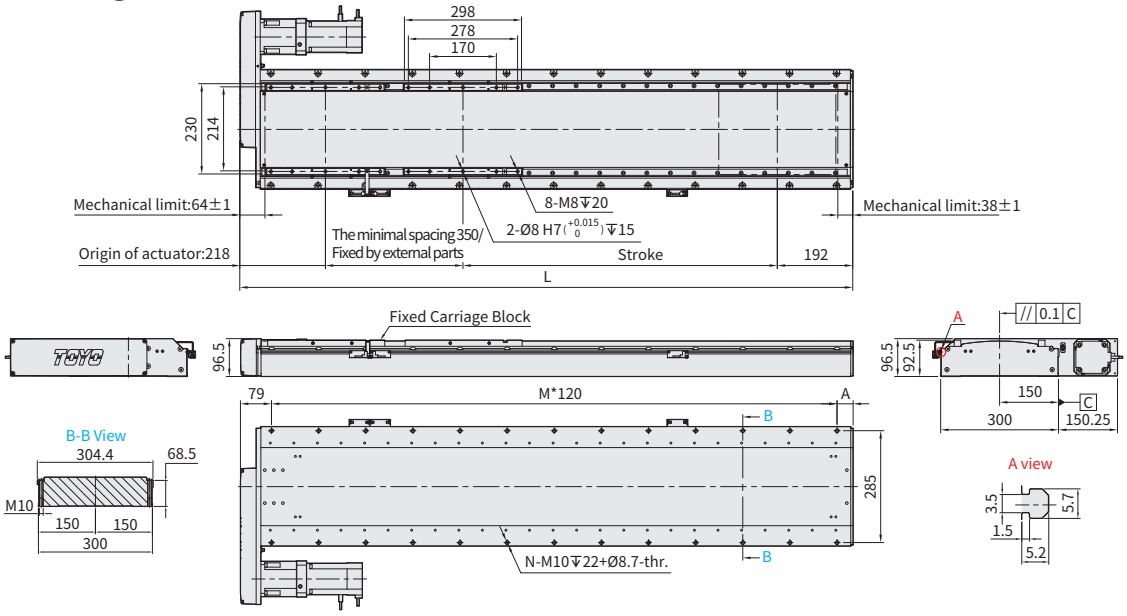

BR Motor Right Side (Sensor on the right side)

Unit : mm

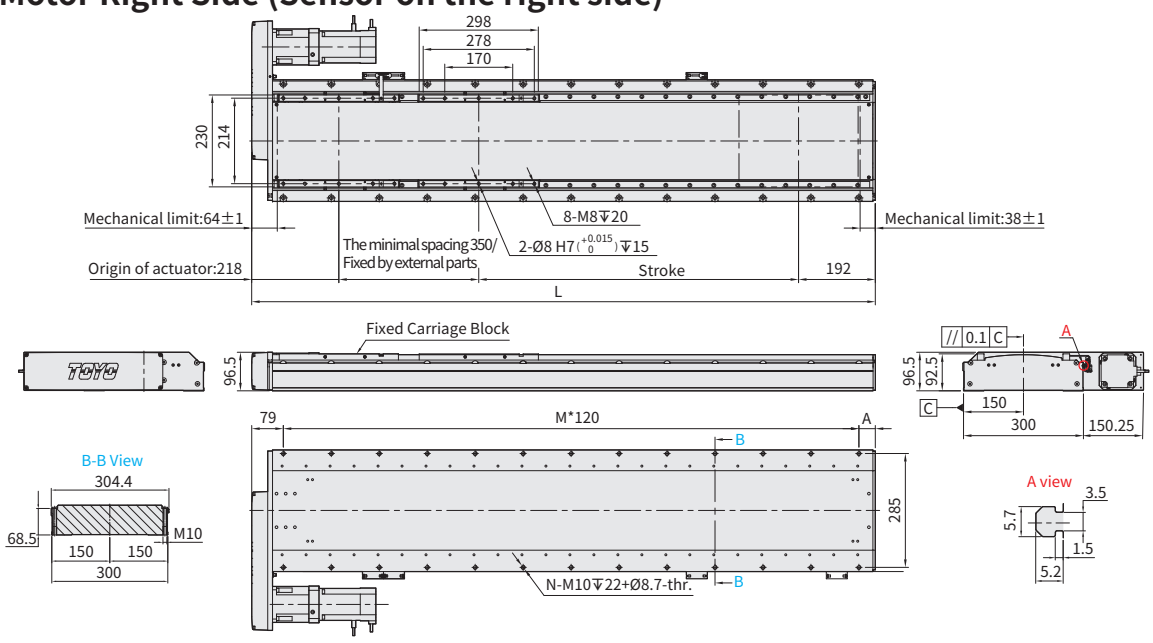

Stroke		50	100	150	200	250	300	350	400	450	500	550	600	650	700	750	800	850	900	950	1000	1050	1100	1150	1200
Limit Stroke (±1)		60	110	160	210	260	310	360	410	460	510	560	610	660	710	760	810	860	910	960	1010	1060	1110	1160	1210
L		810	860	910	960	1010	1060	1110	1160	1210	1260	1310	1360	1410	1460	1510	1560	1610	1660	1710	1760	1810	1860	1910	1960
A		131	61	111	41	91	21	71	121	51	101	31	81	131	61	111	41	91	21	71	121	51	101	31	81
M		5	6	6	7	7	8	8	8	9	9	10	10	10	11	11	12	12	13	13	13	14	14	15	15
N		12	14	14	16	16	18	18	18	20	20	22	22	22	24	24	26	26	28	28	28	30	30	32	32
KG		46.62	48.16	49.72	51.28	52.83	54.39	55.95	57.49	59.05	60.61	62.16	63.72	65.28	66.82	68.38	69.93	71.49	73.05	74.6	76.15	77.7	79.26	80.82	82.38
Linear Speed mm/s	Lead 10	200 Reduce Ratio 3:1 / 120 Reduce Ratio 5:1																							
	Lead 20	400 Reduce Ratio 3:1 / 240 Reduce Ratio 5:1																							
	Lead 32	640 Reduce Ratio 3:1 / 384 Reduce Ratio 5:1																							

Stroke		1250	1300	1350	1400	1450	1500	1550	1600	1650	1700	1750
Limit Stroke (±1)		1260	1310	1360	1410	1460	1510	1560	1610	1660	1710	1760
L		2010	2060	2110	2160	2210	2260	2310	2360	2410	2460	2510
A		131	61	111	41	91	21	71	121	51	101	31
M		15	16	16	17	17	18	18	18	19	19	20
N		32	34	34	36	36	38	38	38	40	40	42
KG		83.93	85.48	87.03	88.59	90.15	91.7	93.26	94.8	96.36	97.92	99.47
Linear Speed mm/s	Lead 10	200 Reduce Ratio 3:1 / 120 Reduce Ratio 5:1								183 Reduce Ratio 3:1 / 120 Reduce Ratio 5:1		167 Reduce Ratio 3:1 / 120 Reduce Ratio 5:1
	Lead 20	400 Reduce Ratio 3:1 / 240 Reduce Ratio 5:1								367 Reduce Ratio 3:1 / 240 Reduce Ratio 5:1		333 Reduce Ratio 3:1 / 240 Reduce Ratio 5:1
	Lead 32	640 Reduce Ratio 3:1 / 384 Reduce Ratio 5:1								587 Reduce Ratio 3:1 / 384 Reduce Ratio 5:1		533 Reduce Ratio 3:1 / 120 Reduce Ratio 5:1

免費服務專線：台灣 Toll-Free Number Taiwan 0800-800-893

2D CAD 3D CAD

• Download at www.toyorobot.com •

BM Motor Bottom Side (Sensor on the left sdie)

Unit : mm

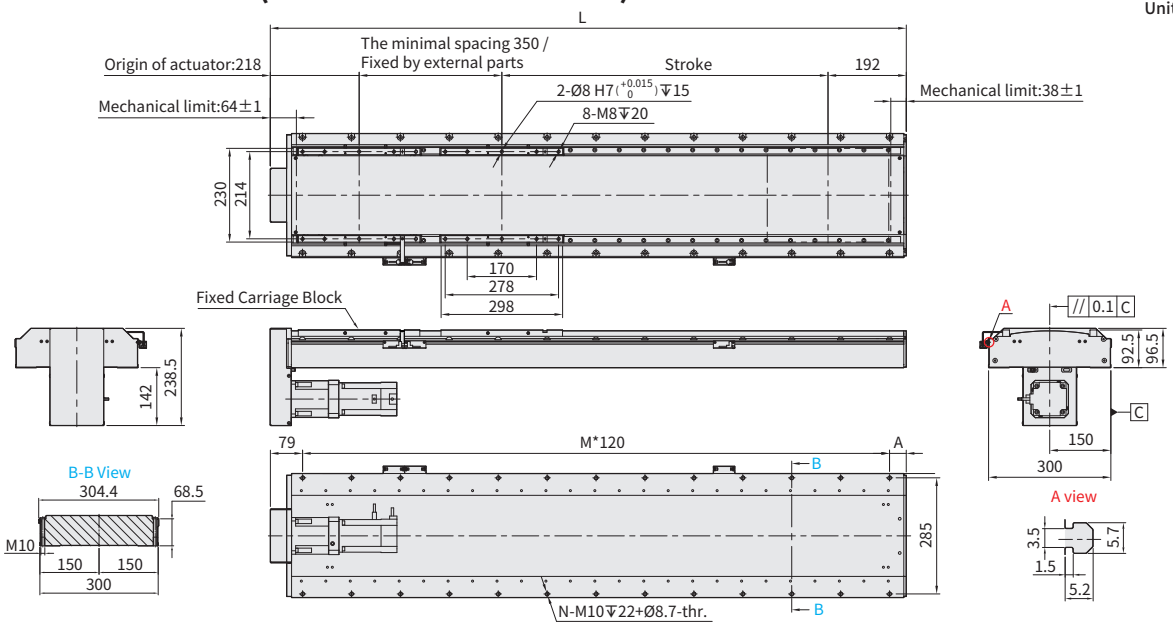

BM Motor Bottom Side (Sensor on the right side)

Unit : mm

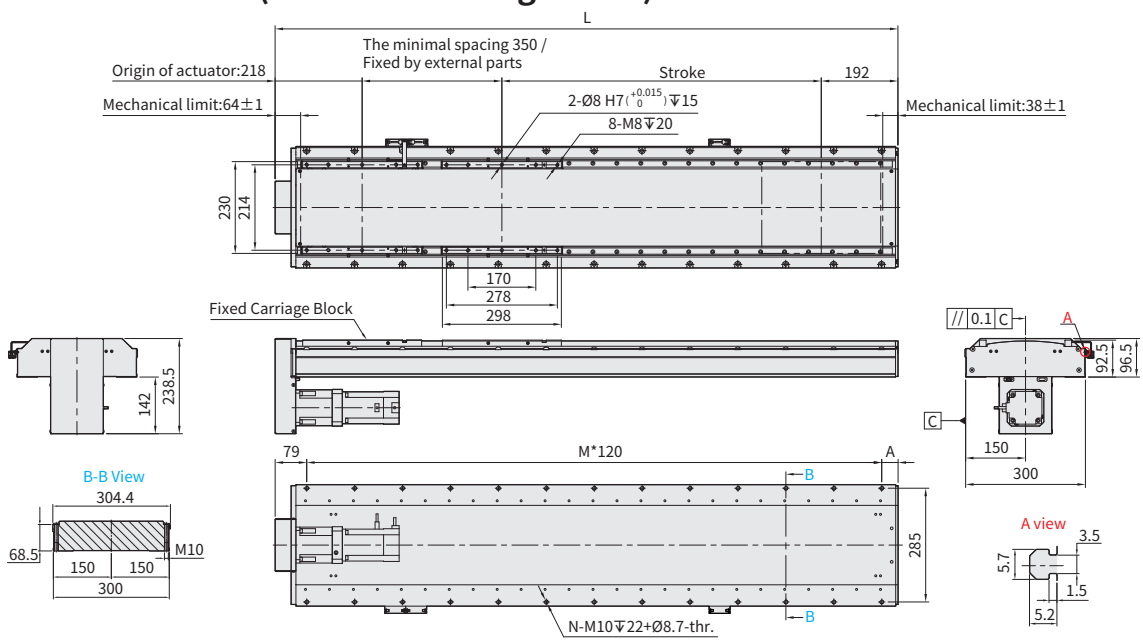

Stroke		50	100	150	200	250	300	350	400	450	500	550	600	650	700	750	800	850	900	950	1000	1050	1100	1150	1200
Limit Stroke (±1)		60	110	160	210	260	310	360	410	460	510	560	610	660	710	760	810	860	910	960	1010	1060	1110	1160	1210
L		810	860	910	960	1010	1060	1110	1160	1210	1260	1310	1360	1410	1460	1510	1560	1610	1660	1710	1760	1810	1860	1910	1960
A		131	61	111	41	91	21	71	121	51	101	31	81	131	61	111	41	91	21	71	121	51	101	31	81
M		5	6	6	7	7	8	8	8	9	9	10	10	10	11	11	12	12	13	13	13	14	14	15	15
N		12	14	14	16	16	18	18	18	20	20	22	22	22	24	24	26	26	28	28	28	30	30	32	32
KG		45.55	47.09	48.65	50.21	51.76	53.32	54.88	56.42	57.98	59.53	61.09	62.65	64.2	65.75	67.3	68.86	70.42	71.98	73.53	75.08	76.63	78.19	79.75	81.3
Linear Speed mm/s	Lead 10	200 Reduce Ratio 3:1 / 120 Reduce Ratio 5:1																							
	Lead 20	400 Reduce Ratio 3:1 / 240 Reduce Ratio 5:1																							
	Lead 32	640 Reduce Ratio 3:1 / 384 Reduce Ratio 5:1																							

Stroke		1250	1300	1350	1400	1450	1500	1550	1600	1650	1700	1750
Limit Stroke (±1)		1260	1310	1360	1410	1460	1510	1560	1610	1660	1710	1760
L		2010	2060	2110	2160	2210	2260	2310	2360	2410	2460	2510
A		131	61	111	41	91	21	71	121	51	101	31
M		15	16	16	17	17	18	18	18	19	19	20
N		32	34	34	36	36	38	38	38	40	40	42
KG		82.86	84.4	85.96	87.52	89.07	90.63	92.19	93.73	95.29	96.85	98.4
Linear Speed mm/s	Lead 10	200 Reduce Ratio 3:1 / 120 Reduce Ratio 5:1								183 Reduce Ratio 3:1 / 120 Reduce Ratio 5:1		167 Reduce Ratio 3:1 / 120 Reduce Ratio 5:1
	Lead 20	400 Reduce Ratio 3:1 / 240 Reduce Ratio 5:1								367 Reduce Ratio 3:1 / 240 Reduce Ratio 5:1		333 Reduce Ratio 3:1 / 240 Reduce Ratio 5:1
	Lead 32	640 Reduce Ratio 3:1 / 384 Reduce Ratio 5:1								587 Reduce Ratio 3:1 / 384 Reduce Ratio 5:1		533 Reduce Ratio 3:1 / 120 Reduce Ratio 5:1

Mitsubishi Servo Motor Information

Servo Motor	No Brake	HG-AK0336	HG-KR053	HG-KR13	HG-KR23	HG-KR43	HG-KR73	HG-SR102	HG-SR152
	With Brake	HG-AK0336B	HG-KR053B	HG-KR13B	HG-KR23B	HG-KR43B	HG-KR73B	HG-SR102B	HG-SR152B
Motor Drives		MR-J3W-0303BN6	MR-J4-10A	MR-J4-10A	MR-J4-20A	MR-J4-40A	MR-J4-70A	MR-J4-100A	MR-J4-200A
Power Supply Capacity		480(W)	0.3	0.3	0.5	0.9	1.3	1.7	2.5
Power Consumption		30	50	100	200	400	750	1000	1500
Rated Torque		0.095	0.16	0.32	0.64	1.3	2.4	4.8	7.2
Instantaneous Maximum Torque		0.286	0.56	1.1	2.2	4.5	8.4	14.3	21.5
Rated Current		2.2	0.9	0.8	1.3	2.6	4.8	5.6	9.4
Maximum Current		6.6	3.2	2.5	4.6	9.1	17	17	29
Rated Speed		3000						2000	
Maximum Speed		6000						3000	
load Inertia ($X10^{-4}$ kg.m^2)	No Brake	0.0061	0.045	0.0777	0.221	0.371	1.26	11.6	16
	With Brake	0.0074	0.0472	0.0837	0.243	0.393	1.37	13.8	18.2
Load Inertia Moment Ratio		Under 30 Multiple	Under 17 Multiple		Under 26 Multiple	Under 25 Multiple	Under 17 Multiple		
Controller	Type	Incremental, Share With Controller							
		18bit	22bit						
	Encuder Resolutiss Of Servo Motor	262144 p/rev	4194304 p/rev						
Structure (Natural-cooling,Open)		IP Rating:IP55	IP Rating:IP66					IP Rating:IP67	
Environmental Conditions	Ambient Temperature	0℃ ~40℃ Non-freezing, -15℃ ~70℃ Non-freezing							
	Ambient Humidty	10%RH~80%RH Non-freezing , 10%RH~90%RH Non-condensing							
	Ambience	lndoors(no direct sunlight), Free From Corrosive Gas, Flammable Gas, Oil Mist, Dust, And Dirt.							
	Altitude	Max. 1000 m Above Sea Level	Max. 2000 m Above Sea Level						
	Vibration	X:49m/s2 Y:49m/s2						X:24.5m/s2 Y:24.5m/s2	
Weight(kg)	No Brake	0.16	0.34	0.54	0.91	1.4	2.8	6.2	7.3
	With Brake	0.26	0.54	0.74	1.3	1.8	3.8	8.2	9.3

30W

Model	30W	L
HG-AK0336	No Brake	68
HG-AK0336B	With Brake	100

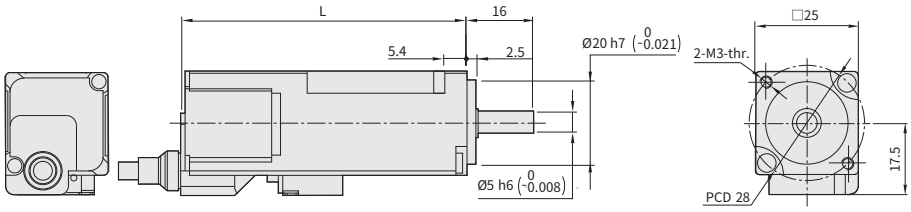

50/100W

Model	50W	L
HG-KR053	No Brake	66.4
HG-KR053B	With Brake	107

Model	100W	L
HG-KR13	No Brake	82.4
HG-KR13B	With Brake	123

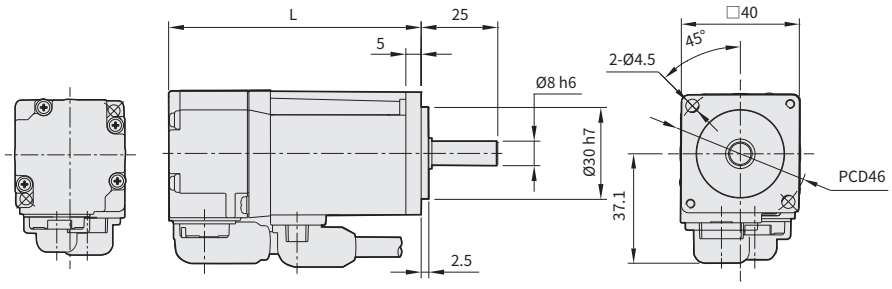

200W

Model	200W	L
HG-KR23	No Brake	76.6
HG-KR23B	With Brake	113.4

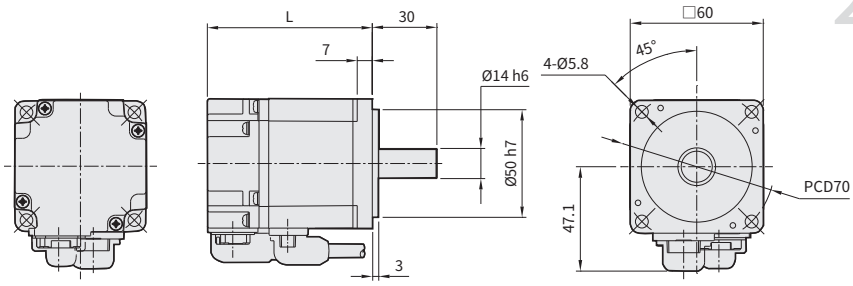

400W

Model	400W	L
HG-KR43	No Brake	98.3
HG-KR43B	With Brake	135.1

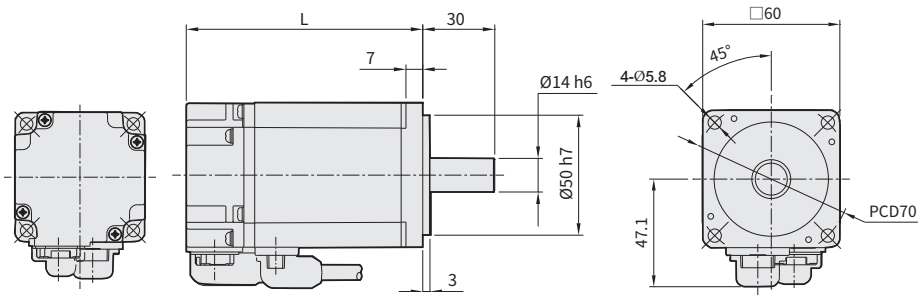

750W

Model	750W	L
HG-KR73	No Brake	112
HG-KR73B	With Brake	152.3

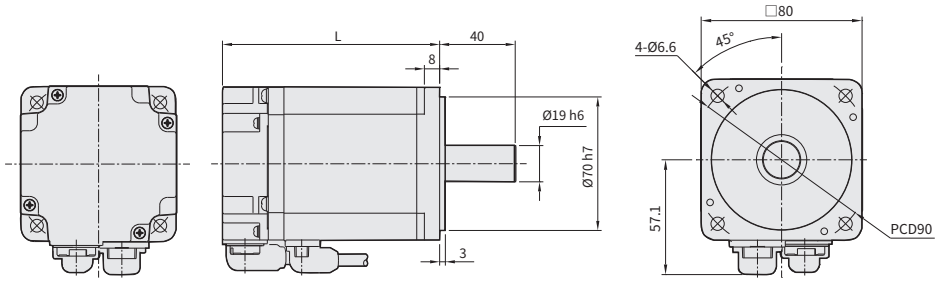

1000W

Model	1000W	L
HG-SR102	No Brake	132.5
HG-SR102B	With Brake	167

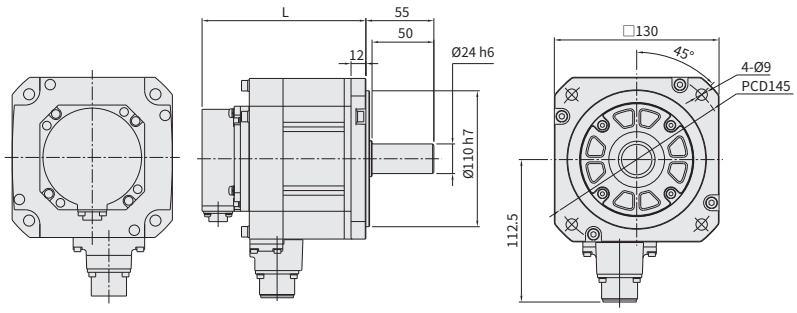

1500W

Model	1500W	L
HG-SR152	No Brake	146.5
HG-SR152B	With Brake	181

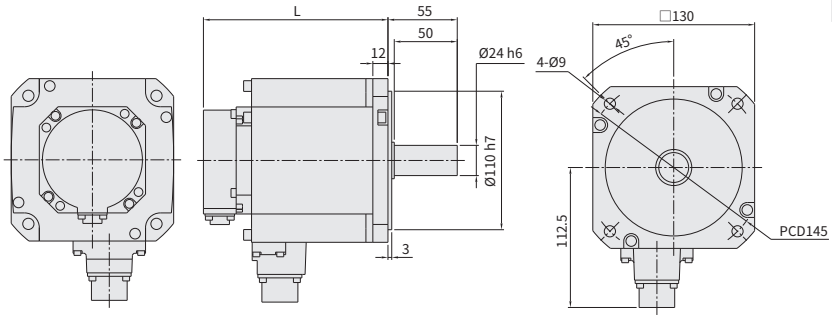

Pansonic Servo Motor Information

Servo Motor	No Brake	MSMF5AZL1U	MSMF012L1U	MHMF022L1U	MHMF042L1U	MHMF082L1U	MDMF102L1G	MDMF152L1G
	With Brake	MSMF5AZL1V	MSMF012L1V	MHMF022L1V	MHMF042L1V	MHMF082L1V	MDMF102L1H	MDMF152L1H
Motor Drives		MADLT05SF	MADLT05SF	MADLT15SF	MBDLT25SF	MCDLT35SF	MDDLT45SF	MDDLT55SF
Power Supply Capacity		0.5	0.5	0.5	0.9	1.8	2.4	2.9
Power Consumption		50	100	200	400	750	1000	1500
Rated Torque		0.16	0.32	0.64	1.27	2.39	4.77	7.16
Instantaneous Maximum Torque		0.48	0.95	2.23	4.46	8.36	14.3	21.5
Rated Current		1.1	1.1	1.4	2.1	3.8	5.2	8
Maximum Current		4.7	4.7	6.9	10.4	18.8	22	34
Rated Speed		3000					2000	
Maximum Speed		6000					3000	
load Inertia ($X10^{-4}$ kg.m^2)	No Brake	0.026	0.048	0.29	0.56	1.56	6.18	9.16
	With Brake	0.029	0.051	0.31	0.58	1.66	7.4	10.4
Load Inertia Moment Ratio		Under 30 Multiple				Under 20 Multiple	Under 10 Multiple	
Controller	Pulse	Absolute / Incremental 23-bit Encoder						
	Resolution	8388608 p/rev						
Structure		Natural-cooling,Open (IP Rating:IP65)						
Environmental Conditions	Ambient Temperature	0℃ ~40℃ Non-freezing, Storage: -20°C to 65°C (Maximum Temperature Tolerance: 80°C for up to 72 hours,						
	Ambient Humidty	20%RH~85%RH No Condensation						
	Ambience	Indoors(no direct sunlight), Free From Corrosive Gas, Flammable Gas, Oil Mist, Dust, And Dirt.						
	Altitude	Max. 1000 m Above Sea Level						
	Vibration	During Operation: ≤ 49 m/s² (5G); When Stopped: ≤ 24.5 m/s² (2.5G)						
Weight(kg)	No Brake	0.32	0.47	0.81	1.2	2.4	4.6	5.7
	With Brake	0.53	0.68	1.2	1.6	3.1	6.1	7.2

50/100W

Model	50W	L
MSMF5AZL1U	No Brake	72
MSMF5AZL1V	With Brake	102

Model	100W	L
MSMF012L1U	No Brake	92
MSMF012L1V	With Brake	122

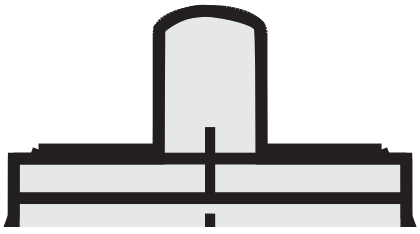

200W

Model	200W	L
MHMF022L1U	No Brake	71
MHMF022L1V	With Brake	100.3

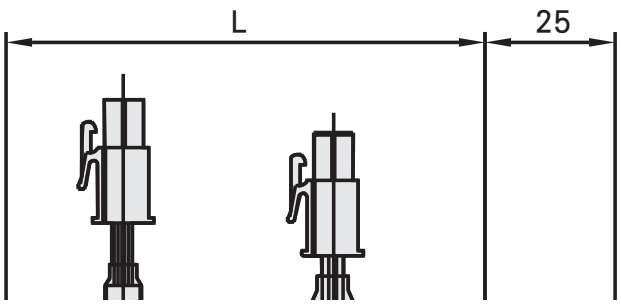

免費服務專線：台灣 Toll-Free Number Taiwan 0800-800-893

400W

Model	400W	L
MHMF042L1U	No Brake	88
MHMF042L1V	With Brake	117.3

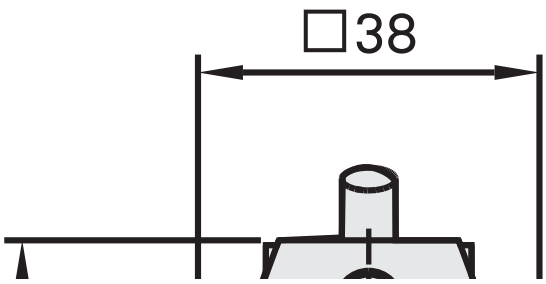

750W

Model	750W	L
MHMF082L1U	No Brake	95.4
MHMF082L1V	With Brake	129

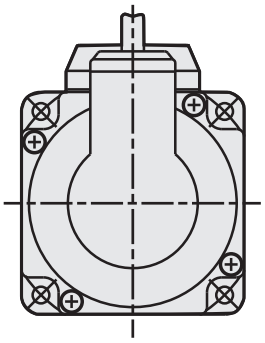

1000W

Model	1000W	L
MDMF102L1G	No Brake	122
MDMF102L1H	With Brake	150

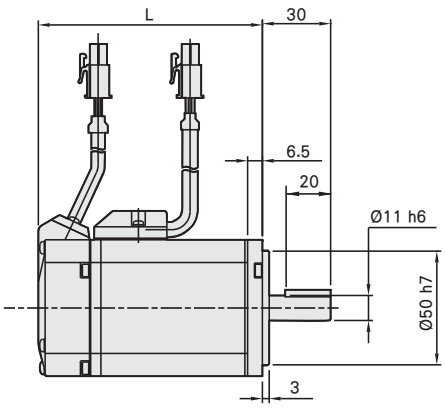

1500W

Model	1500W	L	J
MDMF152L1G	No Brake	136	(105)
MDMF152L1H	With Brake	164	(116)

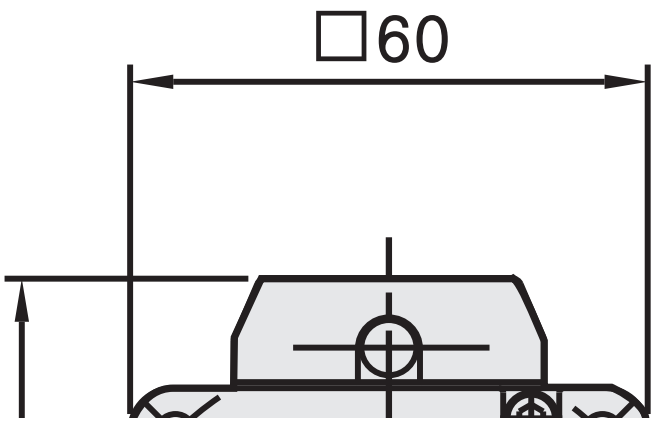

Delta Servo Motor Information

Servo Motor	No Brake	ECMA-C1040FES	ECMA-C20401ES	ECMA-C20602ES	ECMA-C20604ES	ECMA-C20807ES	ECMA-E11310ES	ECMA-E11315ES
	With Brake	ECMA-C1040FFS	ECMA-C20401FS	ECMA-C20602FS	ECMA-C20604FS	ECMA-C20807FS	ECMA-E11310FS	ECMA-E11315FS
Motor Drives		ASD-A2-0121-M	ASD-B2-0121-B	ASD-B2-0221-B	ASD-B2-0421-B	ASD-B2-0721-B	ASD-B2-1021-B	ASD-B2-1521-B
Power Consumption		50	100	200	400	750	1000	1500
Rated Torque		0.159	0.32	0.64	1.27	2.39	4.77	7.16
Instantaneous Maximum Torque		0.477	0.96	1.92	3.82	7.16	14.3	21.48
Rated Current		0.69	0.9	1.55	2.6	5.1	5.6	8.3
Maximum Current		2.05	2.7	4.65	7.8	15.3	16.8	24.9
Rated Speed		3000					2000	
Maximum Speed		5000					3000	
load Inertia ($X10^{-4}$ kg.m^2)	No Brake	0.0206	0.037	0.177	0.277	1.13	8.41	11.18
	With Brake	0.0236	0.04	0.192	0.3	1.18	9.14	11.9
Controller	Type	Incremental 20 bit	Incremental, Share With 17 Bit Controller				Incremental, Share With 20 Bit Controller	
	Encuder Resolutiss Of Servo Motor	160000 p/rev						
Structure		Natural-cooling,Open (IP Rating:IP65)						
Environmental Conditions	Ambient Temperature	0°C ~40°C , -10°C ~80°C Non-freezing						
	Ambient Humidty	20%~90%RH Non-condensing						
	Ambience	lndoors(no direct sunlight), Free From Corrosive Gas, Flammable Gas, Oil Mist, Dust, And Dirt.						
	Altitude	Max. 1000 m Above Sea Level						
	Vibration	2.5G						
Weight(kg)	No Brake	0.42	0.5	1.2	1.6	3	7	7.5
	With Brake	0.72	0.8	1.5	2	3.8	8.4	8.9

50/100W

Model	50W	L
ECMA-C1040FES	No Brake	79.1
ECMA-C1040FFS	With Brake	109.1

Model	100W	L
ECMA-C20401ES	No Brake	100.6
ECMA-C20401FS	With Brake	136.6

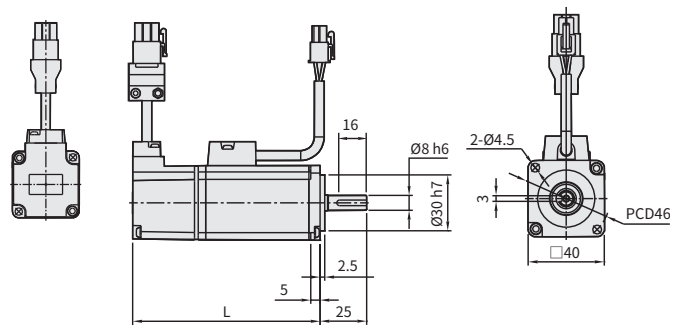

200W

Model	200W	L
ECMA-C20602ES	No Brake	105.5
ECMA-C20602FS	With Brake	141.6

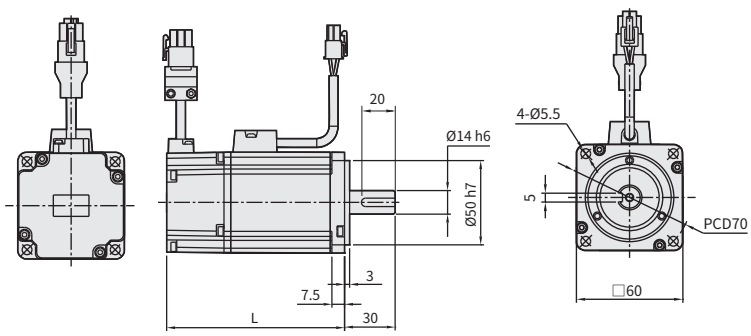

400W

Model	400W	L
ECMA-C20604ES	No Brake	130.7
ECMA-C20604FS	With Brake	166.8

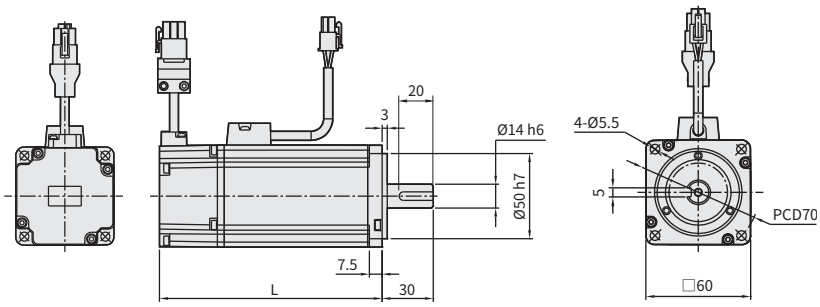

750W

Model	750W	L
ECMA-C20807ES	No Brake	138.3
ECMA-C20807FS	With Brake	178

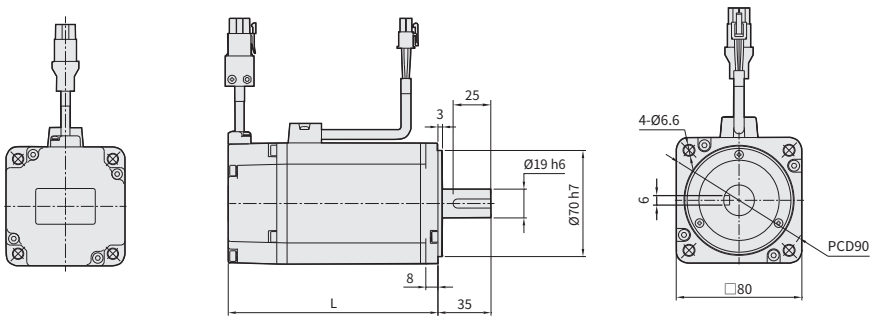

1000W

Model	1000W	L
ECMA-E11310ES	No Brake	147.5
ECMA-E11310FS	With Brake	183.5

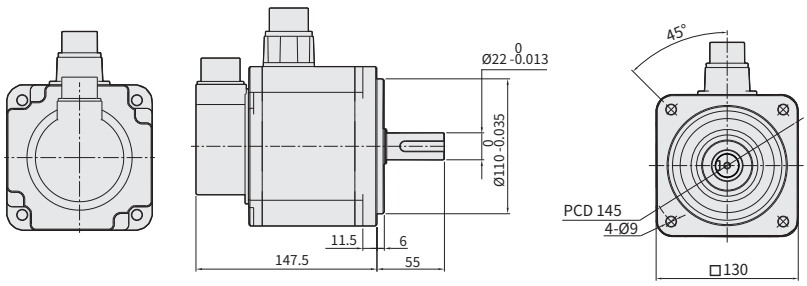

1500W

Model	1500W	L
ECMA-E11315ES	No Brake	167.5
ECMA-E11315FS	With Brake	202

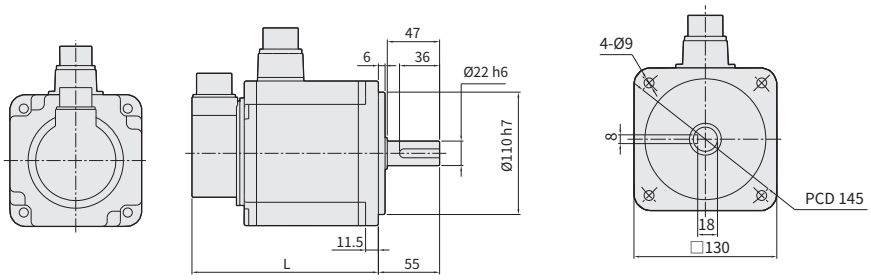

Yaskawa Servo Motor Information

Servo Motor	No Brake	SGMMV-A3A2A21	SGMJV-A5AAA21	SGMJV-01AAA21	SGMJV-02AAA21	SGMJV-04AAA21	SGMJV-08AAA21	SGMSV-10ADA21
	With Brake	SGMMV-A3A2A2C	SGMJV-A5A3A2C	SGMJV-01AAA2C	SGMJV-02AAA2C	SGMJV-04AAA2C	SGMJV-08AAA2C	SGMSV-10ADA2C
Motor Drives	single phase220V	SGDV-2R1F	SGDV-R70F	SGDV-R90F	SGDV-2R1F	SGDV-2R8F	—	—
	Three Phase220V	SGDV-1R6A	SGDV-R70A	SGDV-R90A	SGDV-1R6A	SGDV-2R8A	SGDV-5R5A	SGDV-7R6A
Power Consumption		30	50	100	200	400	750	1000
Rated Torque		0.0955	0.159	0.318	0.637	1.27	2.39	3.18
Instantaneous Maximum Torque		0.286	0.557	1.11	2.23	4.46	8.36	9.54
Rated Current		0.98	0.61	0.84	1.6	2.7	4.7	5.7
Maximum Current		2.9	2.1	2.9	5.8	9.3	16.9	17
Rated Speed		3000						
Maximum Speed		6000						
load Inertia (X10-4 kg.m2)	No Brake	0.00668	0.0414	0.0665	0.259	0.442	1.57	1.74
	With Brake	0.00804	0.0561	0.0812	0.323	0.744	1.74	1.99
Load Inertia Moment Ratio		Under 30 Multiple	Under 20 Multiple		Under 15 Multiple	Under 10 Multiple		Under 5 Multiple
Controller	Type	絕對值 17bit 之編碼器	No Brake 增量型 13bit 之編碼器 With Brake 絕對值 20bit 之編碼器	增量型 13bit 之編碼器				增量型 20 bit
Structure		Natural-cooling,Open (IP Rating:IP55)	Natural-cooling,Open (IP Rating:IP65)					IP67
Environmental Conditions	Ambient Temperature	0°C ~40°C , -10°C ~80°C Non-freezing						
	Ambient Humidty	20%~80%RH Non-condensing						
	Ambience	V15						
	Altitude	B						F
	Vibration	AC1500V 1min						
Weight(kg)	No Brake	0.21	0.3	0.4	0.9	1.3	2.7	4.1
	With Brake	0.31	0.6	0.7	1.5	1.9	3.6	5.5

Model	30W	L
SGMMV-A3A2A21	No Brake	74
SGMMV-A3A2A2C	With Brake	102.5

30W

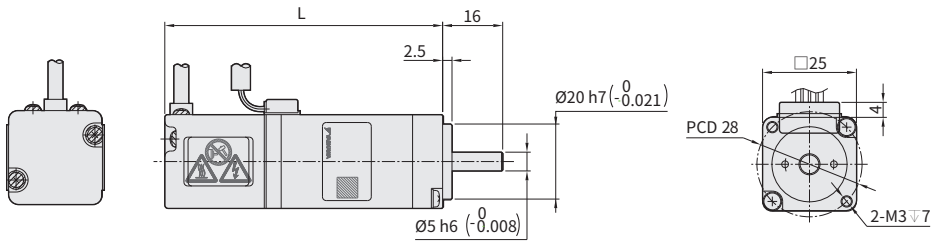

免費服務專線：台灣 Toll-Free Number Taiwan 0800-800-893

50/100W

Model	50W	L
SGMJV-A5AAA21	No Brake	69
SGMJV-A5A3A2C	With Brake	114

Model	100W	L
SGMJV-01AAA21	No Brake	82.5
SGMJV-01AAA2C	With Brake	127.5

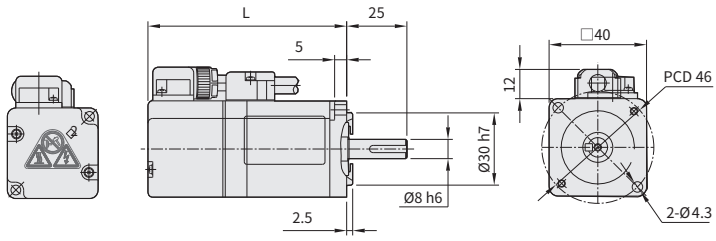

200W

Model	200W	L
SGMJV-02AAA21	No Brake	80
SGMJV-02AAA2C	With Brake	120

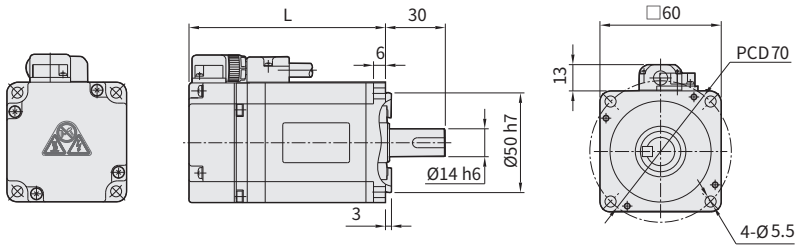

400W

Model	400W	L
SGMJV-04AAA21	No Brake	98.5
SGMJV-04AAA2C	With Brake	138.5

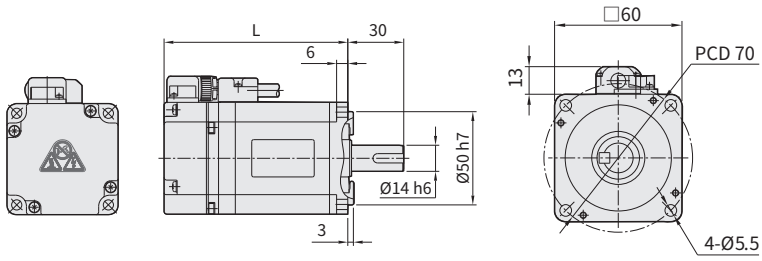

750W

Model	750W	L
SGMJV-08AAA21	No Brake	115
SGMJV-08AAA2C	With Brake	160

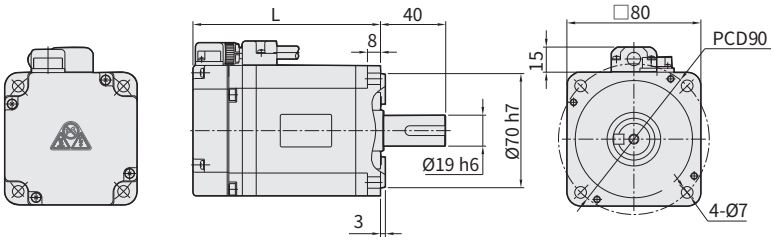

Options

Additional standard PIN hole

Code		Instructions
P		Additional standard PIN hole
Applicable	Motor direction	
ETH2-14 ETH2-17 ECH2-14 ECH2-17	BC BM BL BR	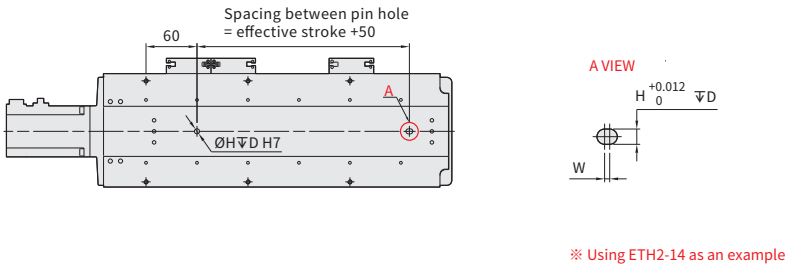 ※ Using ETH2-14 as an example
ETH2-22 ECH2-22	BC BM BL BR	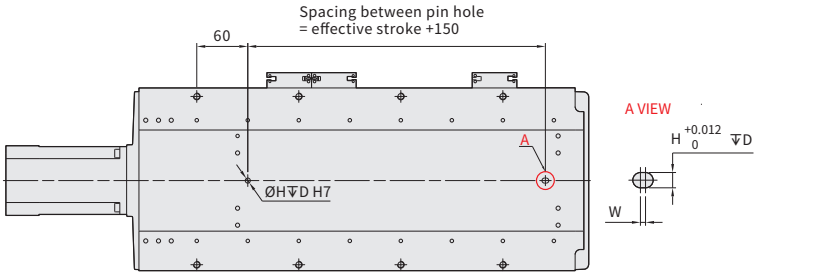 ※ Using ETH2-22 as an example
ETH2-30	BC BM BL BR	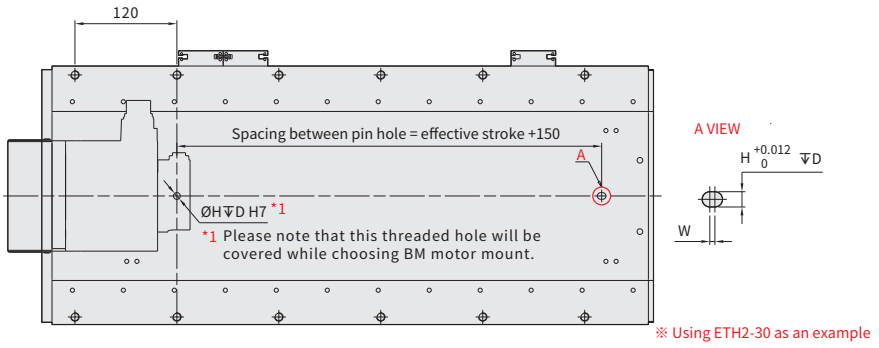 ※ Using ETH2-30 as an example

PIN hole size table

Model	Aperture ØH (mm)	Depth D (mm)	Oval hole center distance W (mm)
ETH2-14/ECH2-14	6	6	2
ETH2-17/ECH2-17	6	6	2
ETH2-22/ECH2-22	6	6	2
ETH2-30	8	8	2

免費服務專線：台灣 Toll-Free Number Taiwan 0800-800-893

Selectable Motor Cable Leading Direction

Code	Instructions	Diagram
MW	Motor cable leading direction upper side	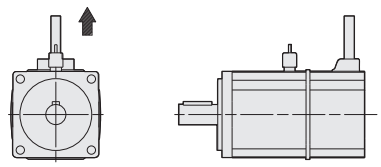
MR	Motor cable leading direction Right side	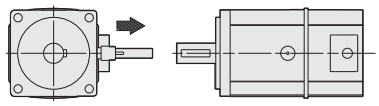
MM	Motor cable leading direction Bottom side	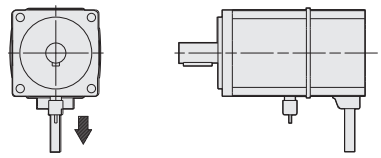
ML	Motor cable leading direction Left side	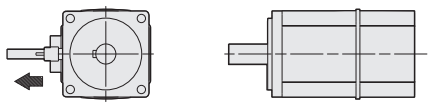

※Definition method of the outlet direction 1. The slide table is placed horizontally 2. Face the motor output shaft, judge up, down, left and right

Ball Screw type	Motor position corresponds to power cable direction															
	BC				BL				BR				BM			
Applicable specs	MW	MR	MM	ML	MW	MR	MM	ML	MW	MR	MM	ML	MW	MR	MM	ML
ETH2 series ECH2 series	○	○	○	○	○	○	○	×	○	×	○	○	×	○	○	○

Options

Selectable Motor Cable Leading Direction

Applicable specs	Provide motor cable leading direction example according to different specifications
ETH2 series ECH2 series	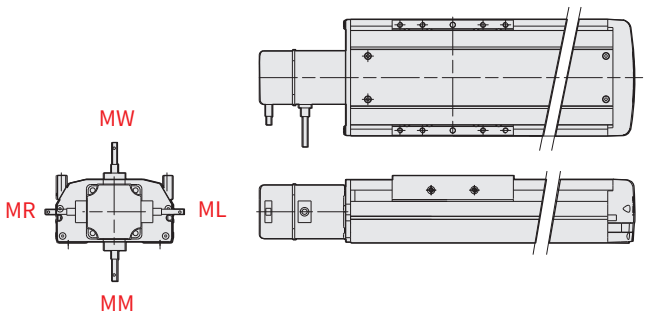 ※ Using ETH as an example
	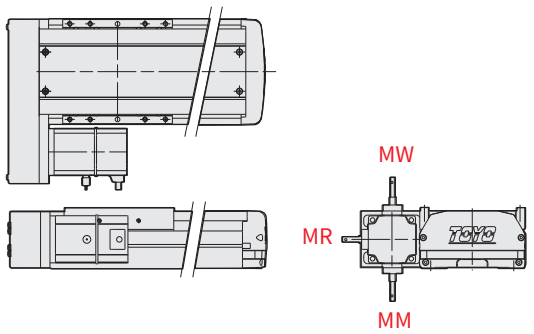 ※ Using ETH as an example ※ This example cannot be used with ML, it will interfere with the slider

免費服務專線：台灣 Toll-Free Number Taiwan 0800-800-893

Additional Keyway for Motor Transmission Accessories

Code		Instructions
CMK		Additional keyway for motor transmission accessories (omly one side - limited to the motor side)
Applicable specs	Motor position	Schematic diagram of additional keyway on one side
ETH2 series ECH2 series	BC M	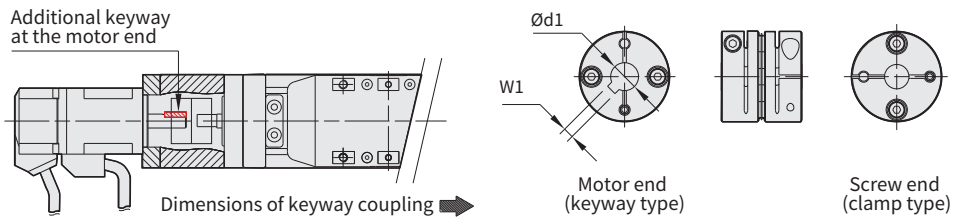 ※ Using GTH as an example
	BL BR BM	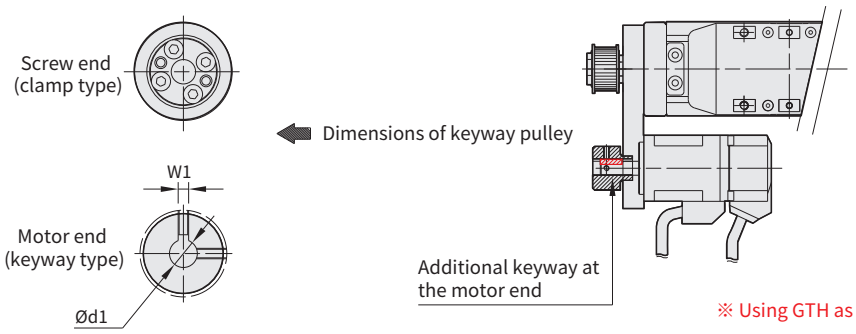 ※ Using GTH as an example

Options

Additional Keyway for Motor Transmission Accessories

Code		Instructions
SKY		Additional keyway at motor end & screw end Shipment with keyway parts
SKN		Additional keyway at the motor end & screw end Shipment without keyway parts (purchased and installed by the customer)
Applicable	Motor position	Schematic diagram of additional keyway on both sides
ETH2 series ECH2 series	BC M	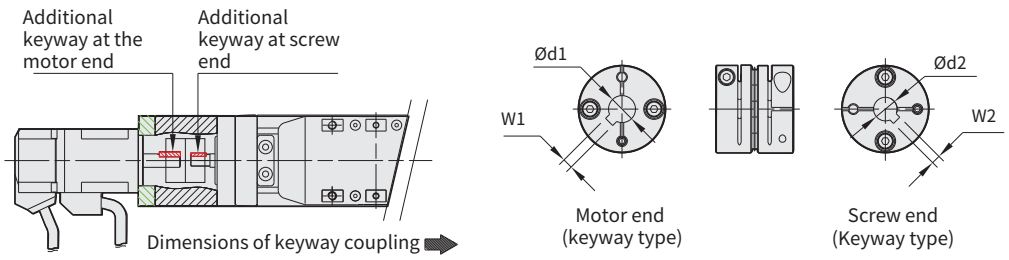 ※ Using GTH as an example
	BL BR BM	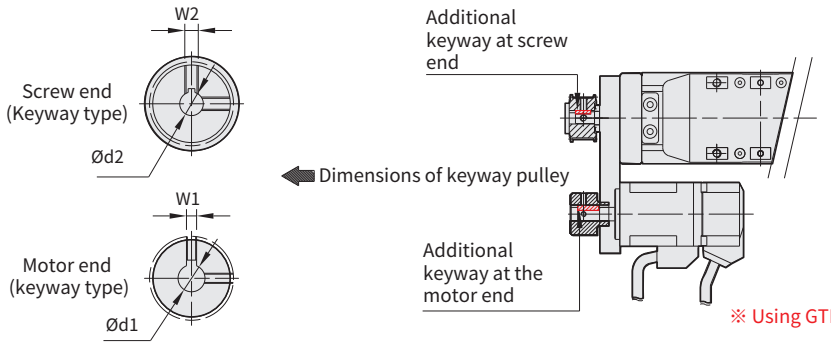 ※ Using GTH as an example

免費服務專線：台灣 Toll-Free Number Taiwan 0800-800-893

Dimensions corresponding to the keyway of each specification

Bulit-in linear Guide ball screw actuator/electric cylinder		Ball Screw actuator / servo electric cylinder		Motor wattage	Motor ShaftØ (mm)(d1)	Keyway Width (mm)(W1)	Ball screw processing end (mm)(d2)	Keyway size (mm) (W2)
General environment	Clean room environment	General environment	Clean room environment					
—	—	ETH2-14	ECH2-14	400W	14	5	10	3
—	—	ETH2-17	ECH2-17	400W			12	4
—	—	ETH2-22	ECH2-22	750W	19	6	17	5
—	—	ETH2-30	—	750W+ Gearbox	22	6	22	6
—	—			T1500W P1500W				
—	—			M1500W	24	8		

*If it does not meet the above definition, a corresponding special order is required.
*This code is not applicable when the motor shaft is flat (non-keyway), such as Mitsubishi 100W.